Product data sheet

Specifications



DIN rail mount, Harmony Solid State Relays, 45A, zeroVoltage switching, contactor configuration screw input, input 4 to 32V DC, output 48 to 600V AC

SSD1A345BDC2

Product availability: Stock - Normally stocked in distribution facility

Main

Range of Product	Harmony Solid State Relays
Product or Component Type	Modular DIN rail relay
Device short name	SSD1
Number of Channels	1
Number of phases	1 phase
Product configuration type	Contactor configuration with pluggable screw input
Mounting support	35 mm symmetrical DIN rail conforming to IEC 60715
rated current	45 A
Output switching mode	Zero voltage switching

Complementary

operating frequency	47...440 Hz
Rated duty	Uninterrupted
Output voltage	48...600 V AC
control circuit voltage	4...32 V DC
Tightening torque	0.5 N.m for control input 5 lb.in for control input 2...2.2 N.m for load output 18...20 lb.in for load output
Connections - terminals	Plug-in screw terminal, clamping connection capacity:0.14...3.30 mm², 26 AWG...12 AWG for input screw terminal, clamping connection capacity:0.75...10 mm², 20 AWG...8 AWG for output
Dielectric strength	4 kV AC for input/output circuit 4 kV AC for input or output to case
rated impulse withstand voltage	6 kV for input/output circuit 6 kV for input or output to case
Insulation resistance	1000 MOhm at 500 V DC
Local signalling	LED (green) for control voltage
pick-up voltage	4 V DC turn-on
drop-out voltage	1 V DC turn-off
input current range	5…15 mA
solid state switching type	Zero voltage switching

Price is “List Price” and may be subject to a trade discount – check with your local distributor or retailer for actual price.

Disclaimer: This documentation is not intended as a substitute for and is not to be used for determining suitability or reliability of these products for specific user applications

Load current	0.2…45 A
transient overvoltage	1200 V
Inrush current	1200 A at 60 Hz
Maximum voltage drop	<1.3 V on-state
motor controller rating	0.75 kW/1 hp at 120 V AC 2.24 kW/3 hp at 240 V AC 3.73 kW/5 hp at 480 V AC
Electromagnetic compatibility	Electrostatic discharge 6 kV criteria B contact discharge conforming to IEC 61000-4-2 Electrostatic discharge 8 kV criteria B air discharge conforming to IEC 61000-4-2 Conducted RF disturbances 10 V, 0.15...80 MHz criteria A level 3 conforming to IEC 61000-4-6 Electrical fast transient/burst immunity test 2 kV, 5/100 kHz criteria B output ports conforming to IEC 61000-4-4 Electrical fast transient/burst immunity test 1 kV, 5/100 kHz criteria B input ports conforming to IEC 61000-4-4 Radiated radio-frequency electromagnetic field immunity test 10 V/m, 80 MHz...1 GHz criteria A conforming to IEC 61000-4-3 Radiated radio-frequency electromagnetic field immunity test 3 V/m, 1.4...6 GHz criteria A conforming to IEC 61000-4-3 Surge immunity test 1 kV criteria B output ports line to line conforming to IEC 61000-4-5 Surge immunity test 2 kV criteria B output ports line to earth conforming to IEC 61000-4-5 Surge immunity test 1 kV criteria B input ports line to earth conforming to IEC 61000-4-5 Radiated emission environment A for DC input supply conforming to CISPR 11 Conducted emission environment A for DC input supply conforming to CISPR 11
device form designation	Form 5 semiconductor output DOL contactor
Maximum I²t for fusing	7200 A².s for 10 ms 6588 A².s for 8.33 ms
Maximum leakage current	1 mA off-state
DV/dt	500 V/µs off-state at maximum rated voltage
Response time	0.5 cycle (turn-on) 0.5 cycle (turn-off)
Power factor	0.5 with maximum load
short circuit protection coordination	Type 1 Type 2
Overvoltage category	III
Width	1.8 in (45 mm)
Height	4.5 in (113.1 mm)
Depth	5.8 in (147.7 mm)
test button	Without test button
Net Weight	1.109 lb(US) (0.503 kg)
Device presentation	Complete product
Protection device type	TVS
Load Category	LCA
Rated frequency (fr)	47...440 Hz
Utilisation category	AC-51 45 A conforming to IEC 60947-4-3
[Ui] Rated Insulation Voltage	600 V

Environment

Flammability rating	V-0 conforming to UL 94

Vibration resistance	0.75 mm (f = 10…150 Hz) conforming to IEC 60068-2-6
Shock resistance	15 gn for 11 ms (peak acceleration) , longitudinal position conforming to IEC 60068-2-27 15 gn for 11 ms (peak acceleration) , vertical position conforming to IEC 60068-2-27
Pollution degree	2
Standards	IEC 60947-4-3 IEC 62314 CSA C22.2 No 14-18 UL 508
IP degree of protection	IP20
Ambient Air Temperature for Operation	-40…176 °F (-40…80 °C)
Ambient Air Temperature for Storage	-40…212 °F (-40…100 °C)

Ordering and shipping details

Category	US10CP222375
Discount Schedule	0CP2
GTIN	3606489808013
Returnability	Yes
Country of origin	CN

Packing Units

Unit Type of Package 1	PCE
Nbr. of units in pkg.	1
Package 1 Height	2.165 in (5.500 cm)
Package 1 Width	4.724 in (12.000 cm)
Package 1 Length	5.906 in (15.000 cm)
Package weight(Lbs)	19.647 oz (557.000 g)
Unit Type of Package 2	S02
Number of Units in Package 2	10
Package 2 Height	5.906 in (15.000 cm)
Package 2 Width	11.811 in (30.000 cm)
Package 2 Length	15.748 in (40.000 cm)
Package 2 Weight	13.362 lb(US) (6.061 kg)

Contractual warranty

Warranty (in months)	18

Environmental Data

Schneider Electric aims to achieve Net Zero status by 2050 through supply chain partnerships, lower impact materials, and circularity via our ongoing “Use Better, Use Longer, Use Again” campaign to extend product lifetimes and recyclability.

Environmental Data explained >

How we assess product sustainability >

Environmental footprint

Total lifecycle Carbon footprint	**7 kg CO2 eq.**
Carbon footprint of the manufacturing phase [A1 to A3]	**3 kg CO2 eq.**
Carbon footprint of the distribution phase [A4]	**0.1 kg CO2 eq.**
Carbon footprint of the installation phase [A5]	**0.1 kg CO2 eq.**
Carbon footprint of the use phase [B2, B3, B4, B6]	**2 kg CO2 eq.**
Carbon footprint of the end-of-life phase [C1 to C4]	**0.7 kg CO2 eq.**
Environmental Disclosure	**Product Environmental Profile**

Use Better

Materials and Substances

Packaging made with recycled cardboard	**Yes**
Packaging without single use plastic	**Yes**
SCIP Number	**134201bc-d293-4667-9cca-10a7f11729e0**
EU RoHS Directive	**Compliant By Exemption**
REACh Regulation	**Reference contains Substances of Very High Concern above the threshold**
California proposition 65	**WARNING: This product can expose you to chemicals including: Lead and lead compounds, which is known to the State of California to cause cancer and birth defects or other reproductive harm. For more information go to www.P65Warnings.ca.gov**

Use Again

Repack and remanufacture

Recyclability potential, in %	**96**
Circularity Profile	**End of Life Information**
Take-back	**No**

Dimensions Drawings

Dimensions

Dimensional Tolerances : ± 0.5 mm / 0.02 in.

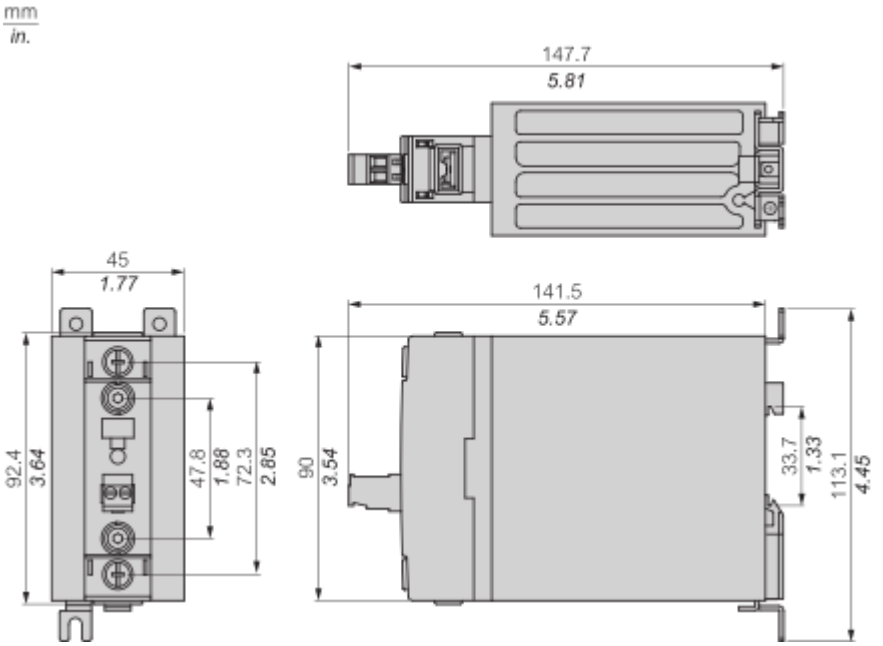

Mounting and Clearance

DIN rail mounting (Rail 35 mm/1.38 in.)

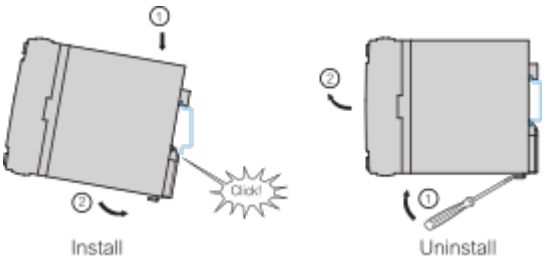

Note : Recommended distance between adjacent units is 22.5 mm / 0.89 inch minimum, to ensure heat dissipation through natural airflow.

Performance Curves

Derating Curves

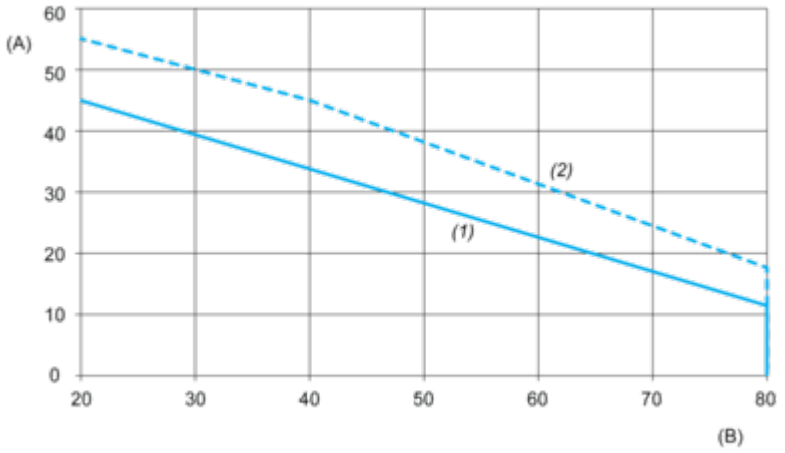

A : Load Current (Amperes)
B : Ambient Temperature (°C)
1 : Multiple units, no minimum spacing between components
2 : Installed single unit, distance to adjacent components more than 22.5 mm

Connections and Schema

Wiring Diagram

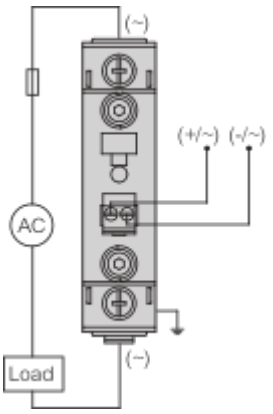

Image of product / Alternate images

Alternative





