Product data sheet

Specifications



Regulated Power Supply, 100...240V AC, 48V, 5A, single phase, Optimized

ABLS1A48050

Product availability: Stock - Normally stocked in distribution facility

Main

Range of Product	Modicon Power Supply
Product or Component Type	Power supply
Power supply type	Regulated switch mode
Variant option	Optimized
Enclosure Material	Metal
Nominal input voltage	100...240 V AC single phase 100...240 V AC phase to phase 140...375 V DC
Rated power in W	240 W
Output voltage	48 V DC
Power supply output current	5 A

Complementary

Efficiency at full load	85...264 V AC 120...375 V DC
Nominal network frequency	50…60 Hz
Network system compatibility	TN TT IT
Maximum leakage current	1 mA 240 V AC
Input protection type	Integrated fuse (not interchangeable) 6.3 A External protection (recommended) 20 A External protection (recommended) 6 A
Inrush current	30 A 115 V 60 A 230 V
Power factor	0.95 at 115 V AC 0.95 at 230 V AC
Efficiency	85 % 115 V AC 88 % 230 V AC
Output voltage adjustment	44…54 V
Power dissipation in W	36 W
Current consumption	< 2.8 A 115 V AC < 1.4 A 230 V AC < 2.4 A 140 V DC
Turn-on time	< 1 s
Holding time	> 20 ms 115 V AC > 20 ms 230 V AC
Startup with capacitive loads	8000 µF

Price is “List Price” and may be subject to a trade discount – check with your local distributor or retailer for actual price.

Disclaimer: This documentation is not intended as a substitute for and is not to be used for determining suitability or reliability of these products for specific user applications

Residual ripple	200 mV
Meantime between failure [MTBF]	at 77 °F (25 °C), full load conforming to SR 332
Output protection type	Against overload and short-circuits, protection technology: automatic reset Against over temperature, protection technology: manual reset Against overvoltage, protection technology: manual reset
Connections - terminals	Screw connection 0.75...4 mm², 18 AWG...12 AWG) without wire end ferrule output Screw connection 0.75...4 mm², 18 AWG...12 AWG) with wire end ferrule output Screw connection 0.75...4 mm², 18 AWG...12 AWG) without wire end ferrule input Screw connection 0.75...4 mm², 18 AWG...12 AWG) with wire end ferrule input
Line and load regulation	< 1.5 % network 0 to 100 % load at 77 °F (25 °C) < 0.5 % network full voltage range in line at 77 °F (25 °C)
Status LED	1 LED (Green) output voltage
Depth	4.6 in (117.6 mm)
Height	4.9 in (123.6 mm)
Width	2.4 in (60 mm)
Net Weight	1.8 lb(US) (0.8 kg)
Output coupling	Single/parallel by switch
Marking	CE UKCA
Mounting support	Top hat type TH35-15 rail IEC 60715 Top hat type TH35-7.5 rail IEC 60715 Double-profile DIN rail
Supply	SELV IEC 60950-1 SELV IEC 60204-1 SELV IEC 60364-4-41
Dielectric strength	3000 V AC with input to output 2000 V AC with input to ground 1500 V AC with output to ground
Service life	10 year(s) 104 °F (40 °C) 50 % load
Overvoltage category	II

Environment

Standards	IEC 62368-1 EN/IEC 61204-3 IEC 61000-6-1 IEC 61000-6-2 IEC 61000-6-3 IEC 61000-6-4 IEC 61000-3-2 EN 61000-3-3 UL 62368-1 CSA C22.2 No 62368-1 CSA C22.2 No. 107.1
Product certifications	CE CUL Listed CUL Recognized RCM CB Scheme EAC KC UKCA CURus
Operating altitude	< 5000 m overvoltage category II
Shock resistance	150 m/s² 11 ms
IP degree of protection	IP20

Ambient air temperature for operation	-4…104 °F (-20…40 °C) without derating mounting position A 115 V AC < 6561.68 ft (2000 m) 104…158 °F (40…70 °C) with current derating mounting position A 115 V AC < 6561.68 ft (2000 m) 104…158 °F (40…70 °C) with current derating of 1.67 % per °C mounting position A 115 V AC < 6561.68 ft (2000 m) 122…158 °F (50…70 °C) with current derating of 2.5 % per °C mounting position A 230 V AC < 6561.68 ft (2000 m)
Electrical shock protection class	Class I
Pollution degree	2
Vibration resistance	3 mm (f= 2…9 Hz) conforming to IEC 60068-2-6 10 m/s² (f= 9…200 Hz) conforming to IEC 60068-2-6
Electromagnetic immunity	Immunity to electrostatic discharge - test level: 8 kV (contact discharge) conforming to IEC 61000-4-2 Immunity to electrostatic discharge - test level: 15 kV (air discharge) conforming to IEC 61000-4-2 Immunity to conducted RF disturbances - test level: 15 V/m (80 MHz...2 GHz) conforming to IEC 61000-4-3 Immunity to conducted RF disturbances - test level: 5 V/m (2...2.7 GHz) conforming to IEC 61000-4-3 Immunity to conducted RF disturbances - test level: 5 V/m (2.7...6 GHz) conforming to IEC 61000-4-3 Immunity to fast transients - test level: 4 kV (on input-output) conforming to IEC 61000-4-4 Surge immunity test - test level: 4 kV (between power supply and earth) conforming to IEC 61000-4-5 Surge immunity test - test level: 3 kV (between phases) conforming to IEC 61000-4-5 Immunity to conducted RF disturbances - test level: 15 V (0.15...80 MHz) conforming to IEC 61000-4-6 Immunity to magnetic fields - test level: 30 A/m (50...60 Hz) conforming to IEC 61000-4-8 Immunity to voltage dips conforming to IEC 61000-4-11 Disturbing field emission conforming to EN 55016-2-3 Limits for harmonic current emissions conforming to IEC 61000-3-2 conforming to EN 55016-1-2 conforming to EN 55016-2-1
Electromagnetic emission	Conducted emissions IEC 61000-6-3 Radiated emissions IEC 61000-6-4

Ordering and shipping details

Category	US1CP1222525
Discount Schedule	CP12
GTIN	3606482185227
Returnability	Yes
Country of origin	IN

Packing Units

Unit Type of Package 1	PCE
Nbr. of units in pkg.	1
Package 1 Height	2.756 in (7.000 cm)
Package 1 Width	6.890 in (17.500 cm)
Package 1 Length	7.087 in (18.000 cm)
Package weight(Lbs)	35.062 oz (994.000 g)
Unit Type of Package 2	S03
Number of Units in Package 2	9
Package 2 Height	11.8 in (30 cm)
Package 2 Width	11.8 in (30 cm)

Package 2 Length	15.7 in (40 cm)
Package 2 Weight	21.147 lb(US) (9.592 kg)

Contractual warranty

Warranty (in months)	18

Environmental Data

Schneider Electric aims to achieve Net Zero status by 2050 through supply chain partnerships, lower impact materials, and circularity via our ongoing “Use Better, Use Longer, Use Again” campaign to extend product lifetimes and recyclability.

Environmental Data explained >

How we assess product sustainability >

Environmental footprint

Total lifecycle Carbon footprint	**1 799 kg CO2 eq.**
Carbon footprint of the manufacturing phase [A1 to A3]	**8 kg CO2 eq.**
Carbon footprint of the distribution phase [A4]	**0.3 kg CO2 eq.**
Carbon footprint of the installation phase [A5]	**0 kg CO2 eq.**
Carbon footprint of the use phase [B2, B3, B4, B6]	**1 790 kg CO2 eq.**
Carbon footprint of the end-of-life phase [C1 to C4]	**2 kg CO2 eq.**
Environmental Disclosure	Product Environmental Profile

Use Better

Materials and Substances

Packaging made with recycled cardboard	**No**
Packaging without single use plastic	**Yes**
SCIP Number	**698d9b2a-7a6a-4b8f-a149-489156f55645**
EU RoHS Directive	Compliant By Exemption
REACh Regulation	Reference contains Substances of Very High Concern above the threshold

Use Again

Repack and remanufacture

Recyclability potential, in %	**12**
Circularity Profile	End of Life Information
Take-back	**No**
WEEE Label	**The product must be disposed on European Union markets following specific waste collection and never end up in rubbish bins.**

Dimensions Drawings

Electrical Safety

- If the unit is use in a manner not specified by the manufacturer, the protection provided by the equipment may be impaired.
- For means of disconnection a switch or circuit breaker, located near the product, must be included in the installation. A marking as disconnecting device for the product is required.
- The device has an internal fuse. The unit is tested and approved with branch circuit protective device up to 20A. This circuit breaker can be used as disconnecting device.
- The power supply is only suitable for audio, video, information, communication, industrial and control equipment.

Dimensions

Front and Side Views

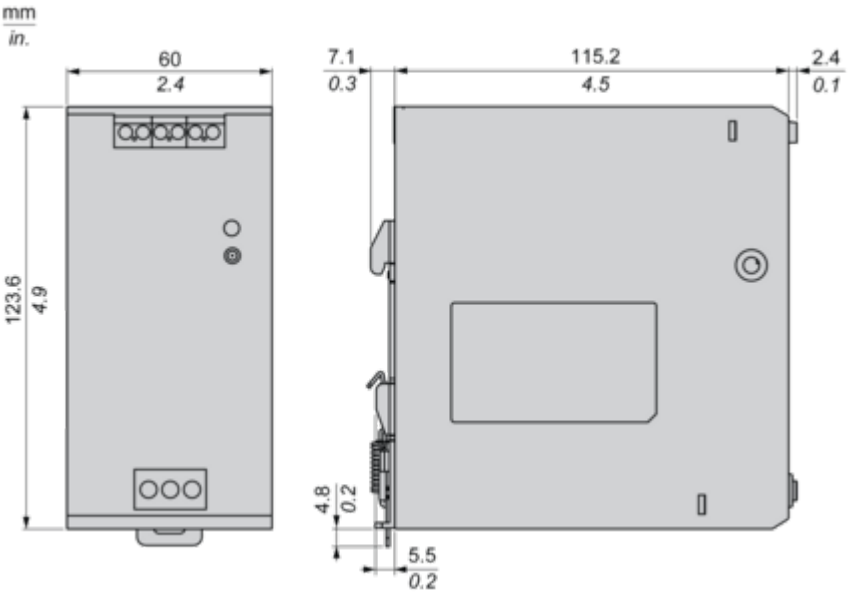

Connections and Schema

Connections and Schema

Correct Parallel Connection

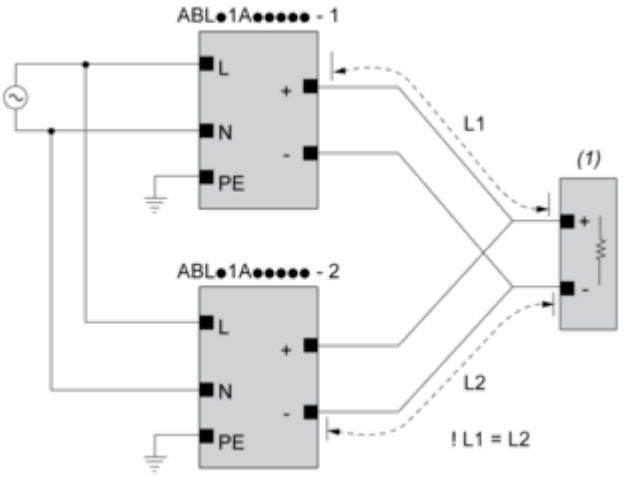

(1) : Load

Incorrect Parallel Connection

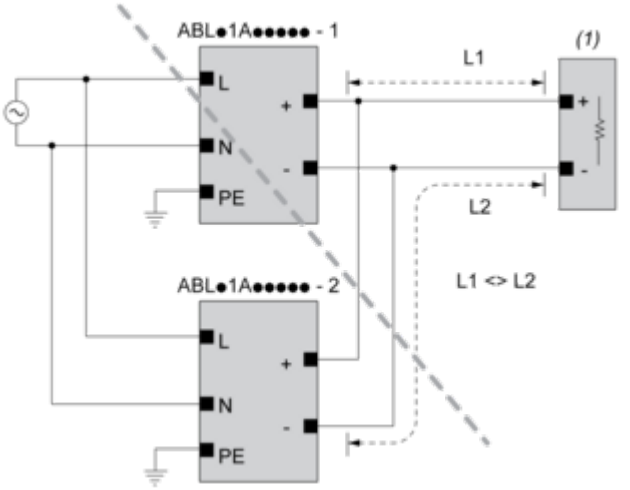

(1) : Load
ABLx1Axxxxx-1 = ABLx1Axxxxx-2
max 2 x ABLx1Axxxxx
L1 = L2
ΔV max 25 mV
I_{Load} < 90% 2 x I_{nom}

Output Voltage Balancing

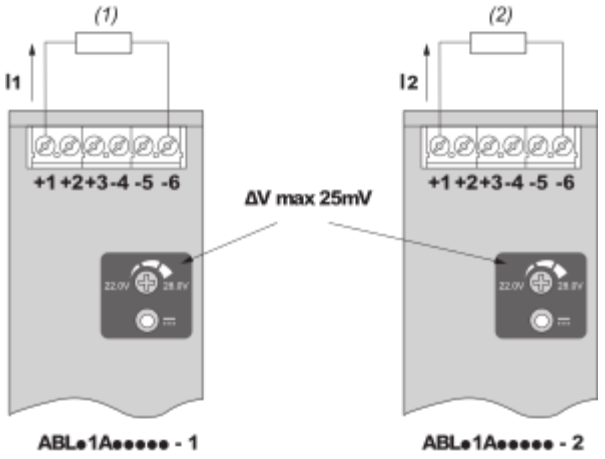

(1) : R_{Load1}

(2) : R_{Load2}

$R_{Load1} = R_{Load2}$

$I_1 = I_2 = \sim I_{nom}$

Connections and Schema

	(1)		
	<40°C	<50°C	<70°C
ABLS1A24021	50°C	60°C	75°C
ABLS1A24038	50°C	60°C	75°C
ABLS1A12062	50°C	60°C	80°C
ABLS1A24031	50°C	60°C	80°C
ABLS1A12100	60°C	70°C	90°C
ABLS1A24050	60°C	70°C	90°C
ABLS1A48025	60°C	70°C	90°C
ABLS1A24100	60°C	70°C	90°C
ABLS1A24200	95°C	95°C	90°C

(1) : Ambient

Mounting and Clearance

Mounting

Mounting Position A

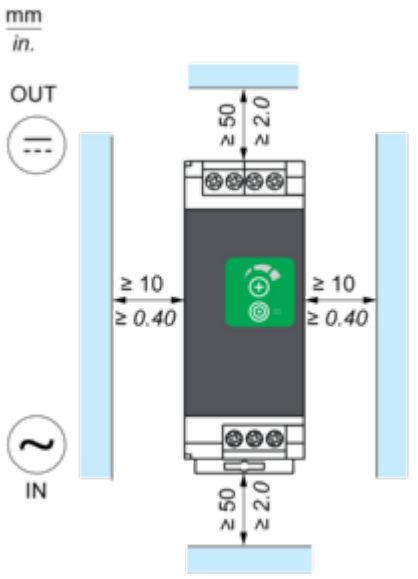

Mounting Position B

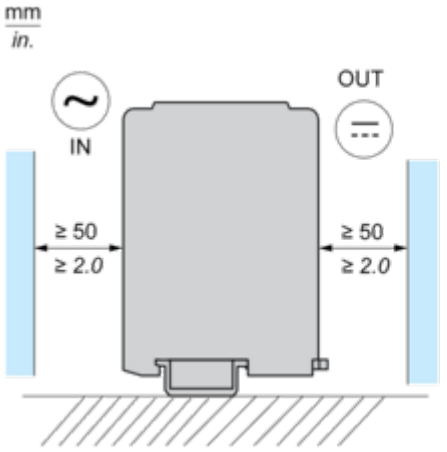

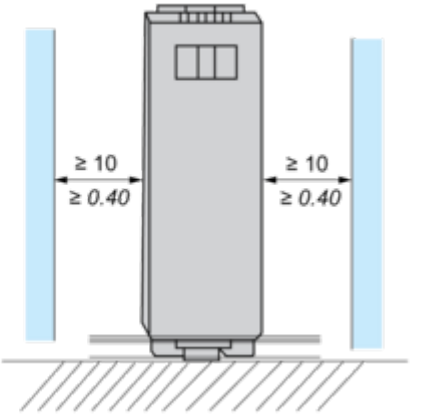

Incorrect Mounting

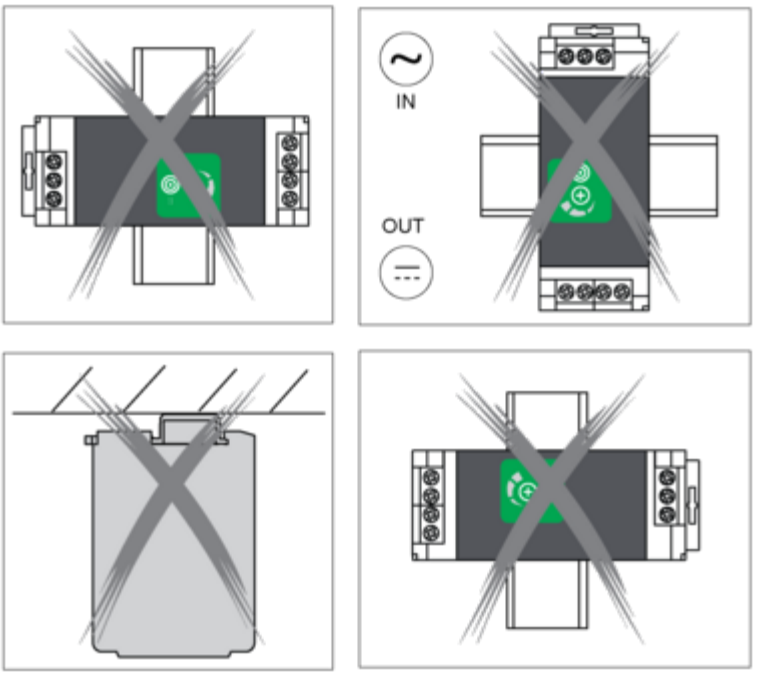
IN
OUT

Performance Curves

Performance Curve

Mounting Position A

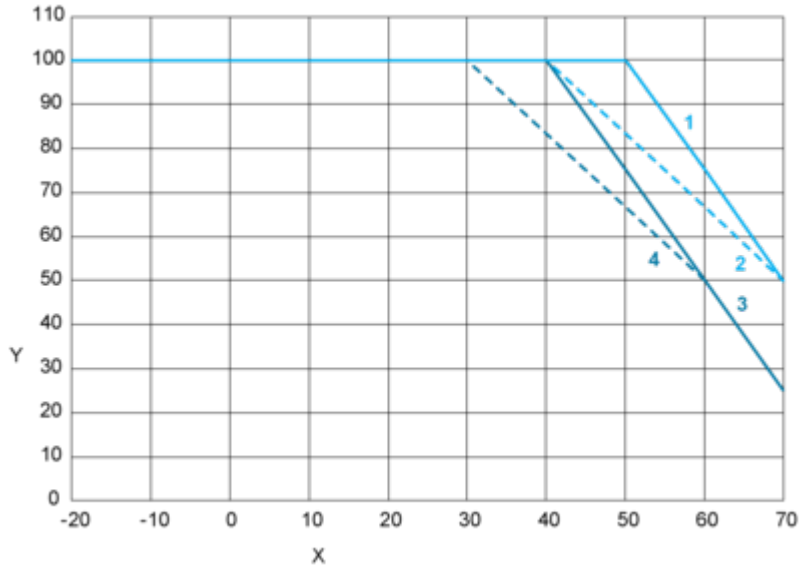

Mounting Position B

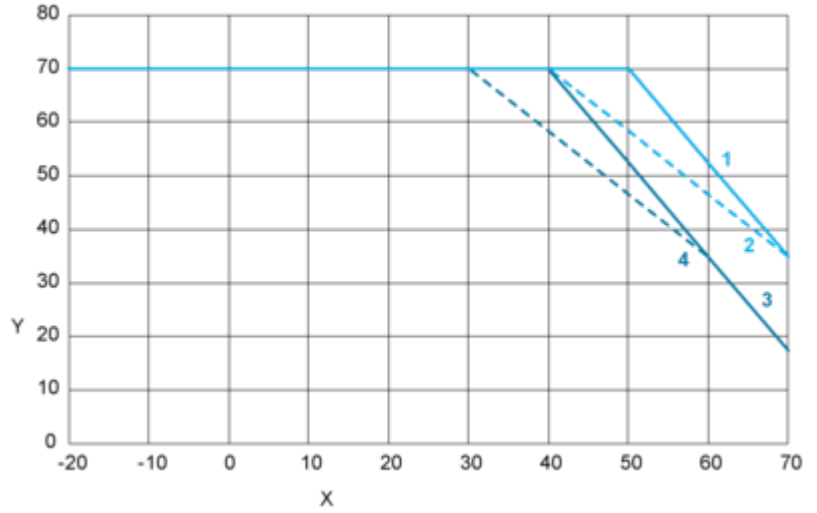

X : Surrounding Air Temperature (°C)
Y : Percentage of Maximum Load (%)
1 : Altitude ≤ 2000 m (6561 ft), Input voltage = 230 VAC / 325 VDC
2 : Altitude ≤ 2000 m (6561 ft), 115 VAC / 162 VDC
3 : Altitude ≤ 5000 m (16404 ft), Input voltage = 230 VAC / 325 VDC
4 : Altitude ≤ 5000 m (16404 ft), 115 VAC / 162 VDC

Image of product / Alternate images

Alternative

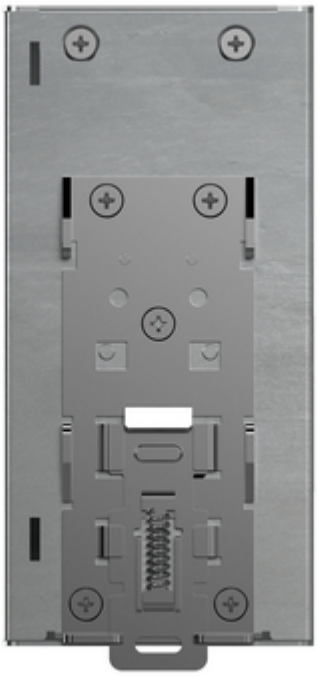



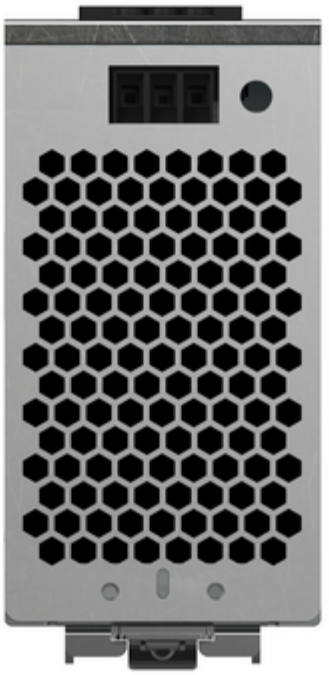

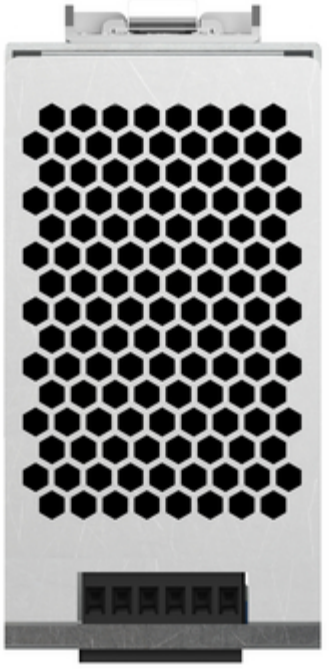


Modicon
ABLS1A48050
Schneider
Electric

