Product data sheet

Specifications



logic controller, Modicon M221, 16 IO, relay, Ethernet, spring

TM221ME16RG

Product availability: Stock - Normally stocked in distribution facility

Main

Range of Product	Modicon M221
Product or Component Type	Logic controller
[Us] rated supply voltage	24 V DC
Discrete input number	8, discrete input IEC 61131-2 Type 1
Analogue input number	2 0...10 V
Discrete output type	Relay normally open
Discrete output number	8 relay
Discrete output voltage	5...125 V DC 5...250 V AC
Discrete output current	2 A

Complementary

Discrete I/O number	16
Maximum number of I/O expansion module	7 (local I/O-Architecture) 14 (remote I/O-Architecture)
Supply voltage limits	20.4…28.8 V
Inrush current	35 A
Maximum power consumption in W	23.3 W 24 V with max number of I/O expansion module) 4.3 W 24 V without I/O expansion module)
Power supply output current	0.52 A 5 V expansion bus 0.46 A 24 V expansion bus
Discrete input logic	Sink or source (positive/negative)
Discrete input voltage	24 V
Discrete input voltage type	DC
Analogue input resolution	10 bits
LSB value	10 mV
Conversion time	1 ms per channel + 1 controller cycle time analog input
Permitted overload on inputs	+/- 30 V DC 5 min maximum)analog input +/- 13 V DC permanent)analog input
Voltage state 1 guaranteed	>= 15 V input
Voltage state 0 guaranteed	<= 5 V input
Discrete input current	7 mA discrete input 5 mA fast input

Price is “List Price” and may be subject to a trade discount – check with your local distributor or retailer for actual price.

Disclaimer: This documentation is not intended as a substitute for and is not to be used for determining suitability or reliability of these products for specific user applications

Input impedance	100 kOhm analog input 3.4 kOhm input 4.9 kOhm fast input
Response time	35 µs turn-off, I2...I5 input 5 µs turn-on, I0, I1, I6, I7 fast input 35 µs turn-on, other terminals input 5 µs turn-off, I0, I1, I6, I7 fast input 100 µs turn-off, other terminals input 5 µs turn-on, turn-off, Q0...Q1 output 50 µs turn-on, turn-off, Q2...Q3 output 300 µs turn-on, turn-off, other terminals output
Configurable filtering time	0 ms input 3 ms input 12 ms input
Output voltage limits	125 V DC 277 V AC
Maximum current per output common	7 A
Absolute accuracy error	+/- 1 % of full scale analog input
Electrical durability	100000 cycles AC-12, 120 V, 240 VA, resistive 100000 cycles AC-12, 240 V, 480 VA, resistive 300000 cycles AC-12, 120 V, 80 VA, resistive 300000 cycles AC-12, 240 V, 160 VA, resistive 100000 cycles AC-15, cos phi = 0.35, 120 V, 60 VA, inductive 100000 cycles AC-15, cos phi = 0.35, 240 V, 120 VA, inductive 300000 cycles AC-15, cos phi = 0.35, 120 V, 18 VA, inductive 300000 cycles AC-15, cos phi = 0.35, 240 V, 36 VA, inductive 100000 cycles AC-14, cos phi = 0.7, 120 V, 120 VA, inductive 100000 cycles AC-14, cos phi = 0.7, 240 V, 240 VA, inductive 300000 cycles AC-14, cos phi = 0.7, 120 V, 36 VA, inductive 300000 cycles AC-14, cos phi = 0.7, 240 V, 72 VA, inductive 100000 cycles DC-12, 24 V, 48 W, resistive 300000 cycles DC-12, 24 V, 16 W, resistive 100000 cycles DC-13, 24 V, 24 W, inductive (L/R = 7 ms) 300000 cycles DC-13, 24 V, 7.2 W, inductive (L/R = 7 ms)
Switching frequency	20 switching operations/minute with maximum load
Mechanical durability	20000000 cycles relay output
Minimum load	1 mA 5 V DC relay output
Protection type	Without protection 5 A
Reset time	1 s
Memory capacity	256 kB user application and data RAM 10000 instructions 256 kB internal variables RAM
Data backed up	256 kB built-in flash memory backup of application and data
Data storage equipment	2 GB SD card optional)
Battery type	BR2032 or CR2032X lithium non-rechargeable
Backup time	1 year 77 °F (25 °C) by interruption of power supply)
Execution time for 1 KInstruction	0.3 ms event and periodic task 0.7 ms other instruction
Execution time per instruction	0.2 µs Boolean
Exct time for event task	60 µs response time
Application structure	8 interrupt tasks 1 cyclic auxiliary task 1 configurable freewheeling/cyclic master task
Maximum size of object areas	512 %KW constant words 8000 %MW memory words 255 %TM timers 255 %C counters 512 %M memory bits
Realtime clock	With

Clock drift	<= 30 s/month 77 °F (25 °C)
Regulation loop	Adjustable PID regulator up to 14 simultaneous loops
Function Available	Frequency generator PWM PLS
Counting input number	4 fast input (HSC mode) 100 kHz 32 bits
counter function	Pulse/direction Single phase A/B
Integrated connection type	USB port mini B USB 2.0 Non isolated serial link serial 1 RJ45 RS232/RS485 Ethernet RJ45
Supply	Serial 1)serial link supply 5 V, <200 mA
Transmission rate	1.2...115.2 kbit/s (115.2 kbit/s by default) 49.2 ft (15 m) RS485 1.2...115.2 kbit/s (115.2 kbit/s by default) 9.8 ft (3 m) RS232 480 Mbit/s USB
Communication port protocol	USB port USB - SoMachine-Network Non isolated serial link Modbus master/slave - RTU/ASCII or SoMachine-Network Ethernet
Port Ethernet	10BASE-T/100BASE-TX 1 328.08 ft (100 m) copper cable
Communication Service	Ethernet/IP adapter Modbus TCP client DHCP client Modbus TCP server Modbus TCP slave device
Local signalling	1 LED (green) for PWR 1 LED (green) for RUN 1 LED (red) for module error (ERR) 1 LED (green) for SD card access (SD) 1 LED (red) for BAT 1 LED per channel (green) for I/O state 1 LED (green) for SL Ethernet network activity (green) for ACT Ethernet network link (yellow) for Link (Link Status)
Electrical connection	terminal block, 3 for connecting the 24 V DC power supply connector, 4 for analogue inputs Mini B USB 2.0 connector for a programming terminal removable spring terminal block, 10 for inputs removable spring terminal block, 11 for outputs
Maximum cable distance between devices	Shielded cable <32.8 ft (10 m) fast input Unshielded cable <98.4 ft (30 m) output Unshielded cable <98.4 ft (30 m) digital input Unshielded cable <3.3 ft (1 m) analog input Shielded cable <9.8 ft (3 m) fast output
Insulation	Between input and internal logic 500 V AC Between fast input and internal logic 500 V AC Non-insulated between inputs Between output and internal logic 500 V AC Between output groups 500 V AC Non-insulated between analogue input and internal logic Non-insulated between analogue inputs
Marking	CE
Mounting support	Top hat type TH35-15 rail IEC 60715 Top hat type TH35-7.5 rail IEC 60715 plate or panel with fixing kit
Height	3.5 in (90 mm)
Depth	2.8 in (70 mm)
Width	2.8 in (70 mm)
Net Weight	0.582 lb(US) (0.264 kg)

Environment

Standards	IEC 61131-2 UL 508 CAN/CSA C22.2 No. 213 IACS E10 ANSI/ISA 12-12-01
Product Certifications	ABS RCM EAC DNV-GL LR cULus CE UKCA cULus HazLoc
Environmental characteristic	Ordinary and hazardous location
Resistance to electrostatic discharge	8 kV in air IEC 61000-4-2 4 kV on contact IEC 61000-4-2
Resistance to electromagnetic fields	9.1 V/m (10 V/m) 80 MHz...1 GHz IEC 61000-4-3 2.7 V/m (3 V/m) 1.4 GHz...2 GHz IEC 61000-4-3 0.9 V/m (1 V/m) 2...2.7 GHz IEC 61000-4-3
Resistance to magnetic fields	98.4 A/m (30 A/m) 50/60 Hz IEC 61000-4-8
Resistance to fast transients	2 kV IEC 61000-4-4 power lines) 2 kV IEC 61000-4-4 relay output) 1 kV IEC 61000-4-4 I/O) 1 kV IEC 61000-4-4 Ethernet line) 1 kV IEC 61000-4-4 serial link)
Surge withstand	2 kV power lines (AC) common mode IEC 61000-4-5 2 kV relay output common mode IEC 61000-4-5 1 kV I/O common mode IEC 61000-4-5 1 kV shielded cable common mode IEC 61000-4-5 0.5 kV power lines (DC) differential mode IEC 61000-4-5 1 kV power lines (AC) differential mode IEC 61000-4-5 1 kV relay output differential mode IEC 61000-4-5 0.5 kV power lines (DC) common mode IEC 61000-4-5
Resistance to conducted disturbances	10 V 0.15...80 MHz IEC 61000-4-6 3 V 0.1...80 MHz Marine specification (LR, ABS, DNV, GL) 10 V spot frequency (2, 3, 4, 6.2, 8.2, 12.6, 16.5, 18.8, 22, 25 MHz) Marine specification (LR, ABS, DNV, GL)
Electromagnetic emission	Conducted emissions 79 dBµV/m QP/66 dBµV/m AV power lines (AC))0.15…0.5 MHz IEC 55011 Conducted emissions 73 dBµV/m QP/60 dBµV/m AV power lines (AC))0.5…300 MHz IEC 55011 Conducted emissions 120...69 dBµV/m QP power lines)10…150 kHz IEC 55011 Conducted emissions 63 dBµV/m QP power lines)1.5…30 MHz IEC 55011 Radiated emissions 40 dBµV/m QP class A 10 m)30…230 MHz IEC 55011 Conducted emissions 79...63 dBµV/m QP power lines)150…1500 kHz IEC 55011 Radiated emissions 47 dBµV/m QP class A 10 m)200…1000 MHz IEC 55011
Immunity to microbreaks	10 ms
Ambient air temperature for operation	14…131 °F (-10…55 °C) horizontal installation) 14…95 °F (-10…35 °C) vertical installation)
Ambient Air Temperature for Storage	-13…158 °F (-25…70 °C)
Relative humidity	10…95 %, without condensation in operation) 10…95 %, without condensation in storage)
IP degree of protection	IP20 with protective cover in place
Pollution degree	<= 2
Operating altitude	0...6561.68 ft (0...2000 m)
Storage altitude	0…9842.5 ft (0…3000 m)

Vibration resistance	3.5 mm 5…8.4 Hz symmetrical rail 3.5 mm 5…8.4 Hz panel mounting 1 gn 8.4…150 Hz symmetrical rail 1 gn 8.4…150 Hz panel mounting
Shock resistance	98 m/s² 11 ms

Ordering and shipping details

Category	US10MSX22533
Discount Schedule	0MSX
GTIN	3606480611285
Returnability	Yes
Country of origin	TW

Packing Units

Unit Type of Package 1	PCE
Nbr. of units in pkg.	1
Package 1 Height	4.2 in (10.7 cm)
Package 1 Width	5.0 in (12.7 cm)
Package 1 Length	3.9 in (9.8 cm)
Package weight(Lbs)	15.5 oz (440.0 g)
Unit Type of Package 2	S04
Number of Units in Package 2	24
Package 2 Height	11.8 in (30 cm)
Package 2 Width	15.7 in (40 cm)
Package 2 Length	23.6 in (60 cm)
Package 2 Weight	24.652 lb(US) (11.182 kg)
Unit Type of Package 3	P12
Number of Units in Package 3	288
Package 3 Height	41.3 in (105.0 cm)
Package 3 Width	47.2 in (120.0 cm)
Package 3 Length	31.5 in (80.0 cm)
Package 3 Weight	324.08 lb(US) (147 kg)

Contractual warranty

Warranty (in months)	18

Environmental Data

Schneider Electric aims to achieve Net Zero status by 2050 through supply chain partnerships, lower impact materials, and circularity via our ongoing “Use Better, Use Longer, Use Again” campaign to extend product lifetimes and recyclability.

Environmental Data explained >

How we assess product sustainability >

Environmental footprint

Total lifecycle Carbon footprint	**104 kg CO2 eq.**
Carbon footprint of the manufacturing phase [A1 to A3]	**14 kg CO2 eq.**
Carbon footprint of the distribution phase [A4]	**0.9 kg CO2 eq.**
Carbon footprint of the installation phase [A5]	**0 kg CO2 eq.**
Carbon footprint of the use phase [B2, B3, B4, B6]	**88 kg CO2 eq.**
Carbon footprint of the end-of-life phase [C1 to C4]	**0.8 kg CO2 eq.**
Environmental Disclosure	**Product Environmental Profile**

Use Better

Materials and Substances

Packaging made with recycled cardboard	**Yes**
Packaging without single use plastic	**No**
SCIP Number	**Db4bbd5b-c14f-4e05-90f0-9ef8d1e54486**
EU RoHS Directive	**Compliant By Exemption**
REACh Regulation	**Reference contains Substances of Very High Concern above the threshold**
California proposition 65	**WARNING: This product can expose you to chemicals including: Lead and lead compounds, which is known to the State of California to cause cancer and birth defects or other reproductive harm. For more information go to www.P65Warnings.ca.gov**
PVC free	**Yes**

Use Again

Repack and remanufacture

Recyclability potential, in %	**0**
Circularity Profile	**End of Life Information**
Take-back	**No**
WEEE Label	**The product must be disposed on European Union markets following specific waste collection and never end up in rubbish bins.**

Dimensions Drawings

Dimensions

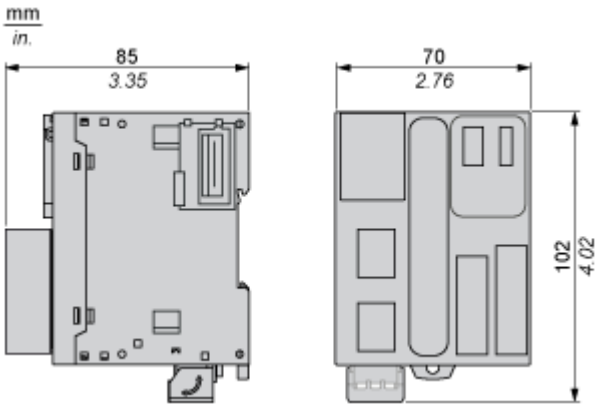

Mounting and Clearance

Mounting on a Rail

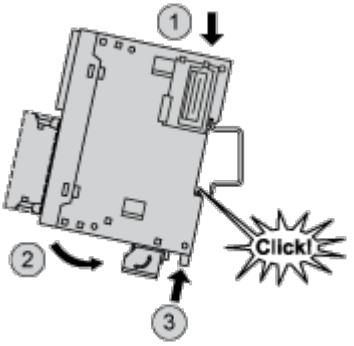

Direct Mounting on a Panel Surface

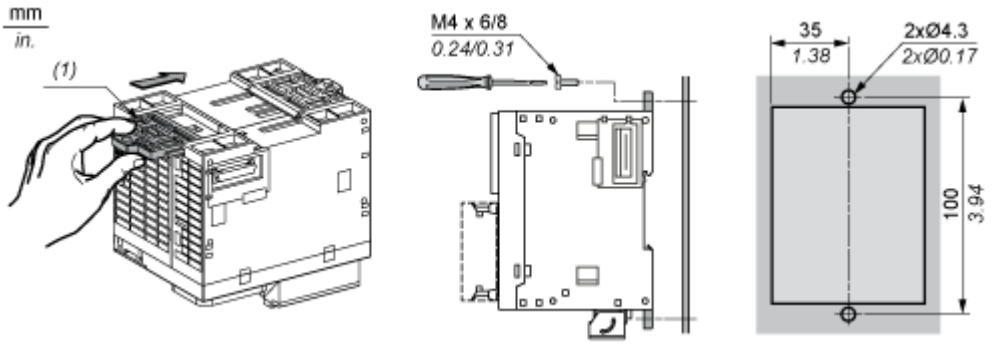

(1) Install a mounting strip

Mounting

Correct Mounting Position

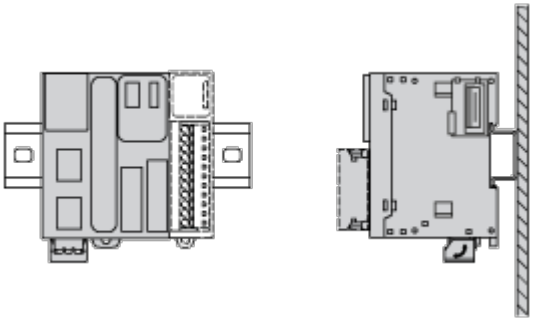

Acceptable Mounting Position

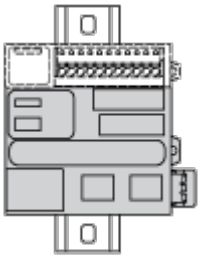

Incorrect Mounting Position

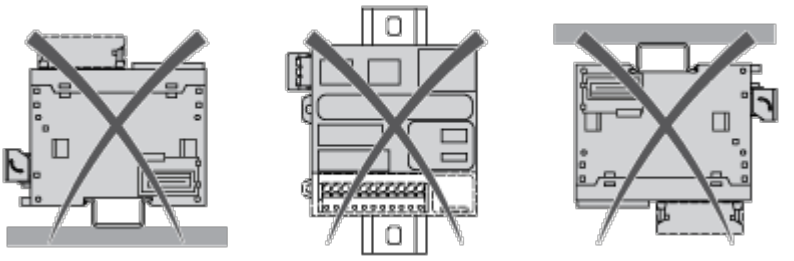

Clearance

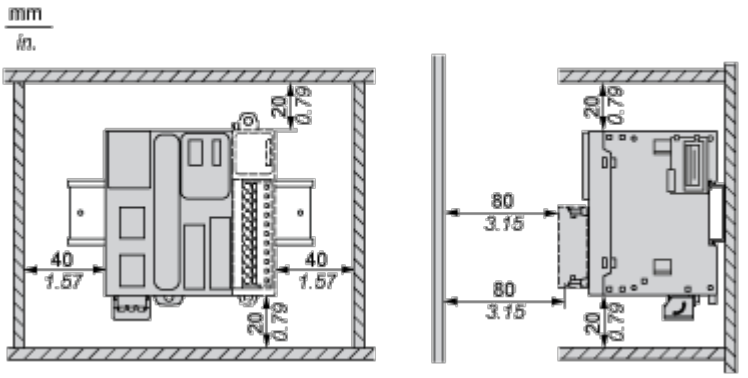

Connections and Schema

Digital Inputs

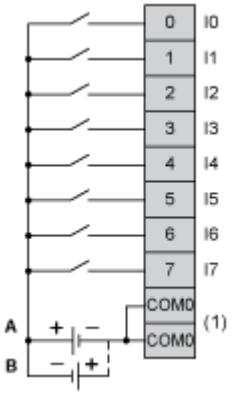

(1) The COM0 terminals are connected internally.

A : Sink wiring (positive logic).

B : Source wiring (negative logic).

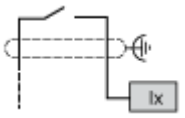

Ix I0, I1, I6, I7

Digital Outputs

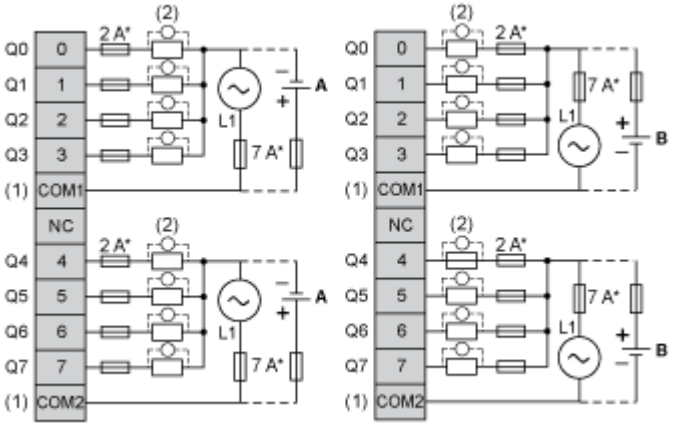

(*) Type T fuse

(1) The COM1 and COM2 terminals are not connected internally.

(2) To improve the life time of the contacts, and to protect from potential inductive load damage, you must connect a free wheeling diode in parallel to each inductive DC load or an RC snubber in parallel of each inductive AC load

A : Source wiring (negative logic).

B : Sink wiring (positive logic).

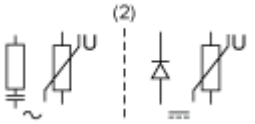

Analog Inputs

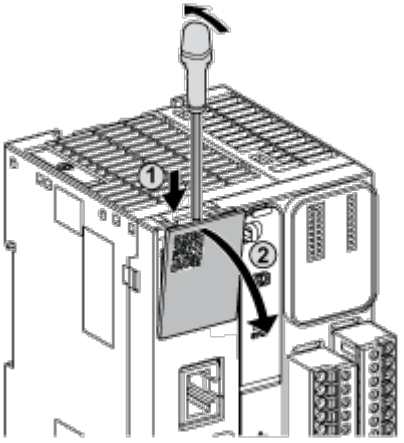

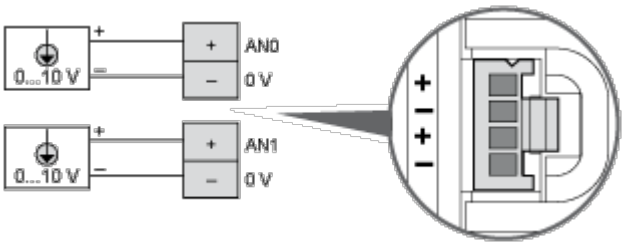

The (-) poles are connected internally.

Pin	Wire Color
AN0 / AN1	Red
0 V	Black

Ethernet Connection

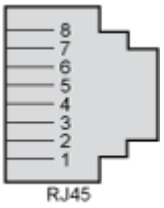

Pin N °	Signal
1	TD+
2	TD-
3	RD+
4	–
5	–
6	RD-
7	–
8	–

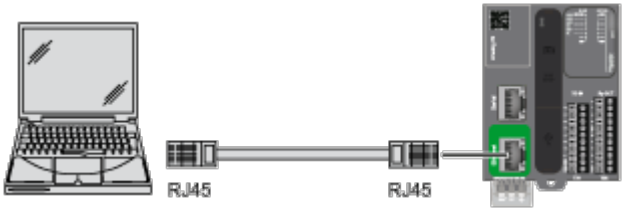

USB Mini-B Connection

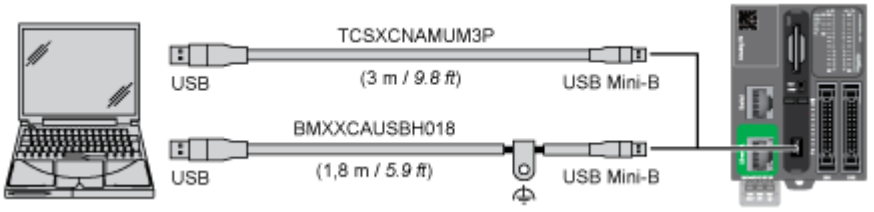

SL1 Connection

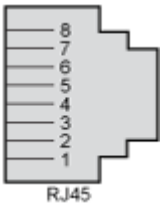

SL1

N °	RS 232	RS 485
1	RxD	N.C.
2	TxD	N.C.
3	RTS	N.C.
4	N.C.	D1
5	N.C.	D0
6	CTS	N.C.
7	N.C.*	5 Vdc
8	Common	Common

N.C.: not connected
* : 5 Vdc delivered by the controller. Do not connect.

