Product data sheet

Specifications



touch panel display ,Harmony STM6, 4inch wide display, 1COM, 2Ethernet, USB host and device, 24V DC

HMISTM6200

Product availability: Stock - Normally stocked in distribution facility

Main

Range of Product	Harmony ST6
Product or Component Type	Touch panel screen
Processor name	ARM Cortex-A8
Memory description	1 GB device memory 128 MB user data memory 512 KB backup memory

Complementary

Display size	4 inch
Display Type	Colour TFT LCD
Display colour	16 million colours
Display Resolution	480 x 272 pixels
Touch panel	Single touch analogue resistive
Backlight lifespan	20000 hours white
Brightness	16 levels
Character font	ASCII ASCII (European characters) Chinese (simplified Chinese) Japanese (ANK, Kanji) Katakana Korean Taiwanese (traditional Chinese)
[Us] rated supply voltage	24 V DC +/- 20 %)
Power Consumption in W	7.8 W
Inrush current	30 A
Local signalling	Status LED green, steady offline Status LED green, steady operating Status LED green, flashing operating Status LED green, faded stand-by Status LED orange, flashing software starting up Status LED red, steady power supply (ON) Status LED red, flashing operating Status LED red, off power supply (OFF)
Number of pages	200 application pages
Port Ethernet	10/100BASE
Integrated connection type	1 COM1 serial link - female RJ45 - RS232C/RS485 2400...115200 bps)bottom 1 USB 2.0 type Aback 1 USB 2.0 type micro Bback 2 Ethernet - female RJ45bottom

Price is “List Price” and may be subject to a trade discount – check with your local distributor or retailer for actual price.

Disclaimer: This documentation is not intended as a substitute for and is not to be used for determining suitability or reliability of these products for specific user applications

Supply	External supply
Realtime clock	Built-in 0...50 °C Built-in 10...90 % RH
Downloadable protocols	Modbus Uni-TE Third party protocols
Product brand	Schneider Electric Modicon Mitsubishi Melsec Omron Sysmac Rockwell Automation Allen-Bradley Siemens Simatic
Fixing mode	Ø 22 mm hole 1.5 to 6 mm thick panel UL 61010-2-201 Ø 22 mm hole IEC 61131-2 Ø 22 mm hole IEC 61000-6-2
Enclosure Material	PC
Front material	Plastic
Marking	CE
Cut-out dimensions	Ø 22.5 mm
Height	4.3 in (108.2 mm)
Width	5.7 in (145.6 mm)
Depth	2.1 in (53.9 mm)
Net Weight	1.08 lb(US) (0.49 kg)

Environment

Immunity to microbreaks	2 ms
Standards	IEC 61000-6-4 IEC 61000-6-2 IEC 61131-2 UL 61010-2-201 CSA C22.2 No 61010-2-201 CSA C22.2 No 213
Product Certifications	CE UKCA cULus RCM KC cULus Class 1 Division 2 DNV ABS RINA BV
Directives	2014/35/EU - low voltage directive 2014/30/EU - electromagnetic compatibility
Ambient Air Temperature for Operation	32…122 °F (0…50 °C)
Ambient Air Temperature for Storage	-4…140 °F (-20…60 °C)
Relative humidity	10…90 % non-condensing
Operating altitude	6561.68 ft (2000 m)
IP degree of protection	IP20 IEC 61131-2 rear panel) IP65 IEC 61131-2 front panel)
NEMA degree of protection	NEMA 4 front panel (indoor use) NEMA 13 front panel (in enclosure)
Shock resistance	147 m/s² 11 ms X, Y, Z directions for 10 cycles (approx. 100 min))IEC 61131-2
Vibration resistance	+/- 3.5 mm 5…9 Hz) X, Y, Z directions for 10 cycles (approx. 100 min) IEC 61131-2 9.8 m/s² 9…150 Hz)

Electromagnetic compatibility	Electrical fast transient/burst immunity test - test level: 2 kV (power ports) conforming to IEC 61000-4-4 Electrical fast transient/burst immunity test - test level: 1 kV (signal ports) Electrostatic discharge immunity test - test level: 6 kV (contact discharge) conforming to IEC 61000-4-2 level 3 Electrostatic discharge immunity test - test level: 8 kV (air discharge)

Ordering and shipping details

Category	US10MC222565
Discount Schedule	0MC2
GTIN	3606481856395
Returnability	Yes
Country of origin	ID

Packing Units

Unit Type of Package 1	PCE
Nbr. of units in pkg.	1
Package 1 Height	3.346 in (8.500 cm)
Package 1 Width	5.315 in (13.500 cm)
Package 1 Length	8.465 in (21.500 cm)
Package weight(Lbs)	22.575 oz (640.000 g)
Unit Type of Package 2	S03
Number of Units in Package 2	9
Package 2 Height	11.811 in (30.000 cm)
Package 2 Width	11.811 in (30.000 cm)
Package 2 Length	15.748 in (40.000 cm)
Package 2 Weight	14.301 lb(US) (6.487 kg)
Unit Type of Package 3	P06
Number of Units in Package 3	72
Package 3 Height	29.528 in (75.000 cm)
Package 3 Width	23.622 in (60.000 cm)
Package 3 Length	31.496 in (80.000 cm)
Package 3 Weight	135.426 lb(US) (61.428 kg)

Contractual warranty

Warranty (in months)	18

Environmental Data

Schneider Electric aims to achieve Net Zero status by 2050 through supply chain partnerships, lower impact materials, and circularity via our ongoing “Use Better, Use Longer, Use Again” campaign to extend product lifetimes and recyclability.

Environmental Data explained >

How we assess product sustainability >

Environmental footprint

Total lifecycle Carbon footprint	**480 kg CO2 eq.**
Carbon footprint of the manufacturing phase [A1 to A3]	**128 kg CO2 eq.**
Carbon footprint of the distribution phase [A4]	**0.1 kg CO2 eq.**
Carbon footprint of the installation phase [A5]	**0 kg CO2 eq.**
Carbon footprint of the use phase [B2, B3, B4, B6]	**352 kg CO2 eq.**
Carbon footprint of the end-of-life phase [C1 to C4]	**0.2 kg CO2 eq.**
Environmental Disclosure	Product Environmental Profile

Use Better

Materials and Substances

F-gas usage performance	**Only air and vacuum used for insulation / breaking, no F-gas including SF6**
Packaging made with recycled cardboard	**Yes**
Packaging without single use plastic	**No**
SCIP Number	**715da6e9-302b-4bd3-a8b4-7f8cdd474a0e**
EU RoHS Directive	Compliant By Exemption
REACh Regulation	Reference contains Substances of Very High Concern above the threshold
California proposition 65	**WARNING: This product can expose you to chemicals including: Lead and lead compounds, which is known to the State of California to cause cancer and birth defects or other reproductive harm. For more information go to www.P65Warnings.ca.gov**
Halogen content performance	**Product contains halogen above thresholds**
PVC free	**No**
Silicon free	**No**

Use Longer

Lifetime extension

Upgradeability	**Yes**

Use Again

Repack and remanufacture

Circularity Profile	End of Life Information

Removable battery	**User replaceable**
Take-back	**No**
WEEE Label	 **The product must be disposed on European Union markets following specific waste collection and never end up in rubbish bins.**

Dimensions Drawings

Dimensions

Dimensions with rear module attached to display module

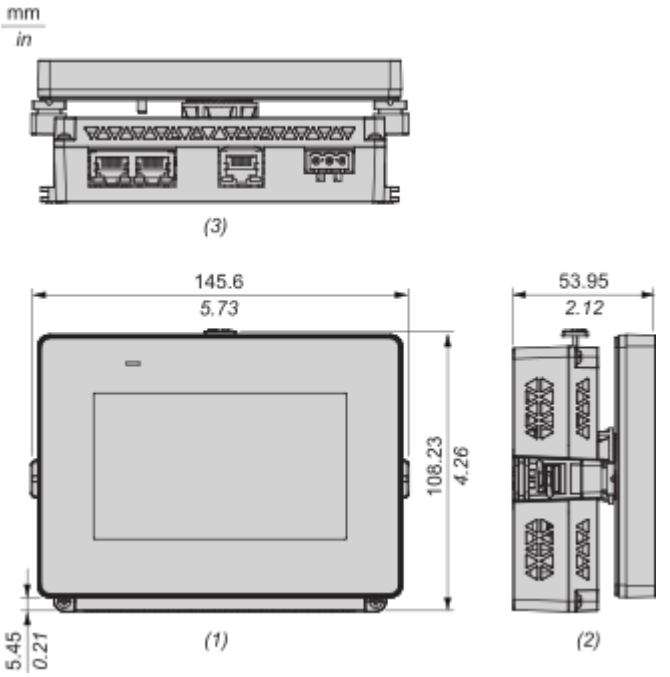

(1) : Front
(2) : Left
(3) : Bottom

Mounting and Clearance

Mounting and Clearance

Panel Cut Dimensions

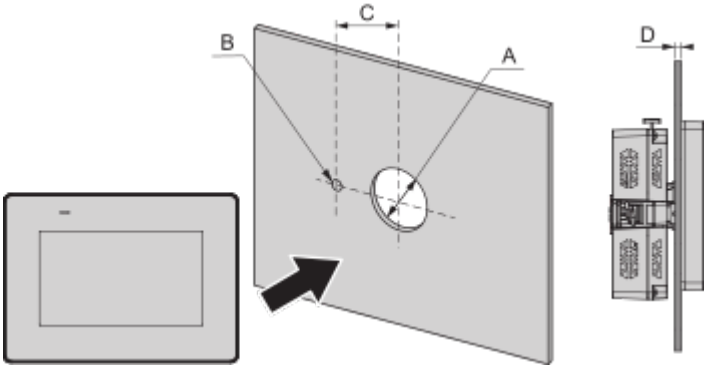

A		B		C		D (Thickness range)	
mm	in.	mm	in.	mm	in.	mm	in.
22.5 (+0/-0.3)	0.88 (+0/-0.01)	4.0 (+0/-0.2)	0.15 (+0/-0.007)	30.0 (+0/-0.2)	1.18 (+0/-0.007)	1.5...6.0 (0.06...0.23)	3.0...6.0 (0.12...0.23)

Installation Requirements

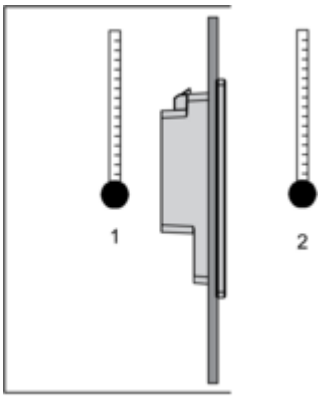

1 : Internal temperature
2 : External temperature

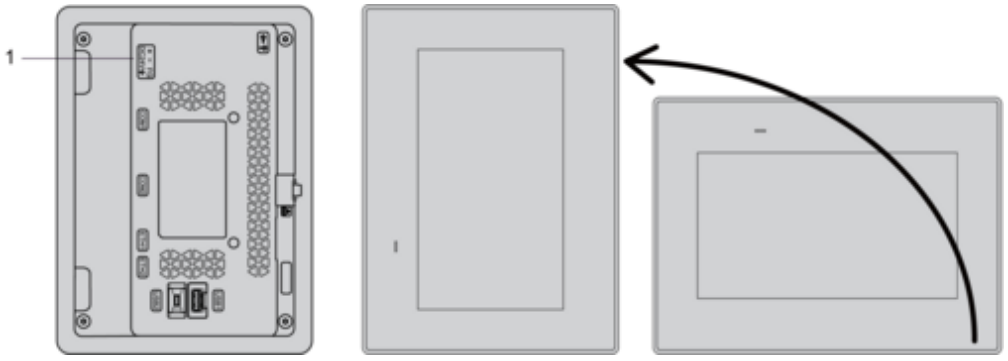

1 : Power connector

Mounting Angle

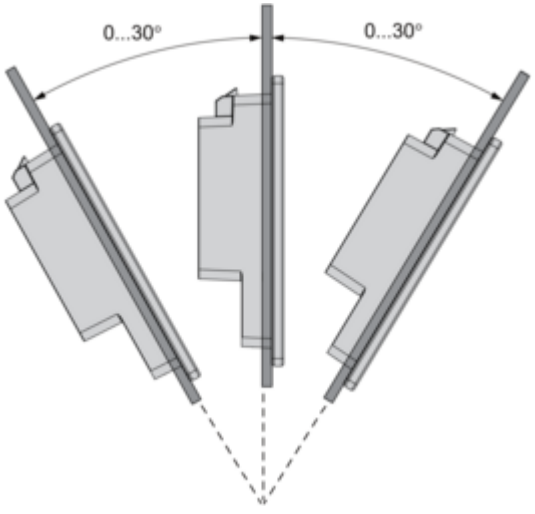

Clearance

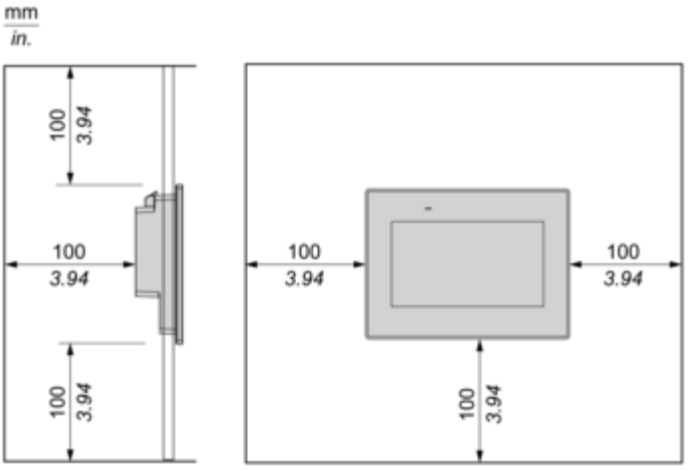
mm
in.
100
3.94
100
3.94
100
3.94
100
3.94
100
3.94
100
3.94

Image of product / Alternate images

Alternative











