TELTONIKA | Networks

RUT360



Copyright © 2021, TELTONIKA NETWORKS. Specifications and information given in this document are subject to change by TELTONIKA NETWORKS without prior notice.

HARDWARE

FRONT VIEW

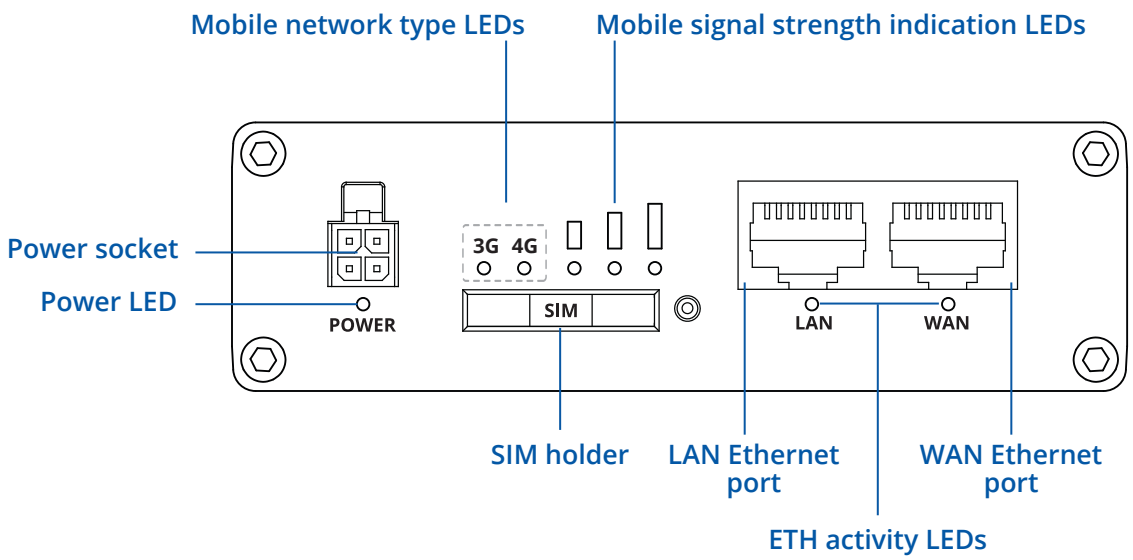

BACK VIEW

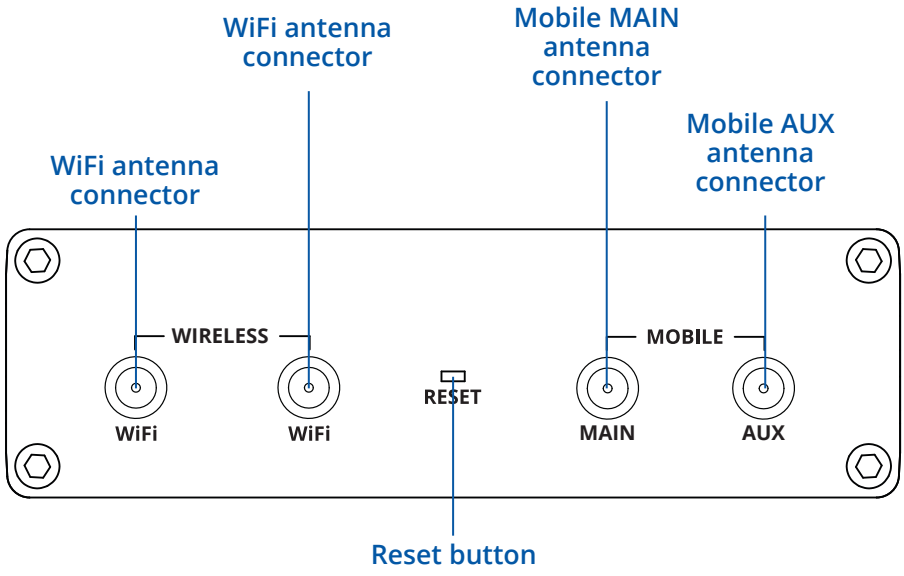

POWER SOCKET PINOUT

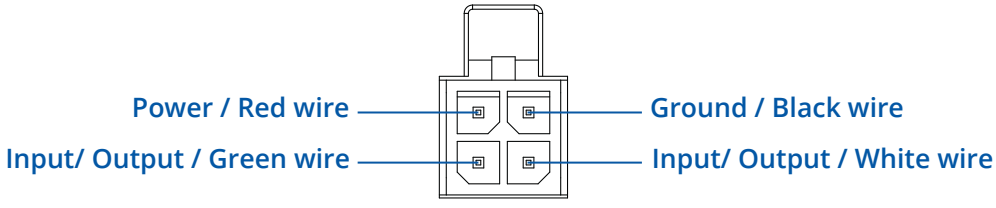

***I/O**: programmable Input/Output pins (Open Collector output max 30 V, 300 mA or Digital input where 0-6 V detected as logic low and 8-30 V - logic high).

Copyright © 2021, TELTONIKA NETWORKS. Specifications and information given in this document are subject to change by TELTONIKA NETWORKS without prior notice.

FEATURES

MOBILE

Mobile module	4G (LTE) – Cat 6 up to 300 Mbps, 3G – Up to 42 Mbps
Status	Signal strength, SINR, RSRP, RSRQ, Bytes sent/received, connected band, carrier aggregation, IMSI, ICCID
SMS	SMS status, SMS configuration, send/read SMS via HTTP POST/GET, Email to SMS, SMS to Email, SMS to HTTP, SMS to SMS, SMS auto reply
USSD	Supports sending and reading Unstructured Supplementary Service Data messages
Black/Whiles list (planned)	Operator black/white list
Multiple PDN	Possibility to use different PDNs for multiple network access and services
Band management	Band lock, Used band status display
APN	Auto APN
Bridge mode	Direct connection (bridge) between mobile ISP and device on LAN

WIRELESS

Wireless mode	802.11 b/g/n, 2x2 MIMO, Access Point (AP), Station (STA)
WiFi security	WPA3-EAP, WPA3-SAE, WPA2-Enterprise-PEAP, WPA2-PSK, WEP; AES-CCMP, TKIP, Auto Cipher modes, client separation
ESSID	ESSID stealth mode
Wireless Hotspot	Captive portal (Hotspot), internal/external Radius server, SMS OTP, MAC auth, built in customizable landing page, walled garden

ETHERNET

WAN	1 x WAN port (can be configured as LAN) 10/100 Mbps, compliance with IEEE 802.3, IEEE 802.3u standards, supports auto MDI/MDIX crossover
LAN	1 x LAN ports, 10/100 Mbps, compliance with IEEE 802.3, IEEE 802.3u standards, supports auto MDI/MDIX crossover

NETWORK

Routing	Static routes, Dynamic routes (planned)
VoIP passthrough support	H.323 and SIP-alg protocol NAT helpers, allowing proper routing of VoIP packets
Network protocols	TCP, UDP, IPv4, IPv6, ICMP, NTP, DNS, HTTP, HTTPS, FTP (planned), SMTP, SSL v3, TLS, ARP, VRRP, PPP, PPPoE, UPNP, SSH, DHCP, Telnet client, SNMP (planned), MQTT (planned), Wake on LAN (WOL) (planned)
Connection monitoring	Ping Reboot, Wget reboot, Periodic Reboot, LCP and ICMP for link inspection
Firewall	Port forwards, traffic rules, NAT rules, custom rules
DHCP	Static and dynamic IP allocation, DHCP Relay, Relayd
QoS / Smart Queue Management (SQM) (planned)	Traffic priority queuing by source/destination, service, protocol or port, WMM, 802.11e
DDNS (planned)	Supported >25 service providers, others can be configured manually
Network backup	Mobile, Wired and WiFi WAN options, each of which can be used as an automatic Failover
Load balancing	Balance Internet traffic over multiple WAN connections
SSHFS (optional)	Possibility to mount remote file system via SSH protocol (not available in standard FW)

SECURITY

Authetication	Pre-shared key, digital certificates, X.509 certificates
Firewall	Pre-configured firewall rules can be enabled via WebUI, unlimited firewall configuration via CLI; DMZ; NAT; NAT-T
Attack prevention	DDOS prevention (SYN flood protection, SSH attack prevention, HTTP/HTTPS attack prevention), port scan prevention (SYN-FIN, SYN-RST, X-mas, NULL flags, FIN scan attacks)
VLAN	Tag based VLAN separation
Mobile quota control	Custom data limits for both SIM cards
WEB filter (planned)	Blacklist for blocking out unwanted websites, Whitelist for specifying allowed sites only
Access control	Flexible access control of TCP, UDP, ICMP packets, MAC address filter

Copyright © 2021, TELTONIKA NETWORKS. Specifications and information given in this document are subject to change by TELTONIKA NETWORKS without prior notice.

VPN

OpenVPN	Multiple clients and a server can run simultaneously, 12 encryption methods
OpenVPN Encryption	DES-CBC, RC2-CBC, DES-EDE-CBC, DES-EDE3-CBC, DESX-CBC, BF-CBC, RC2-40-CBC, CAST5-CBC, RC2-64-CBC, AES-128-CBC, AES-192-CBC, AES-256-CBC
IPSec	IKEv1, IKEv2, with 5 encryption methods for IPsec (DES, 3DES, AES128, AES192, AES256)
GRE	GRE tunnel
PPTP, L2TP	Client/Server instances can run simultaneously, L2TPv3 support (planned)
Stunnel (planned)	Proxy designed to add TLS encryption functionality to existing clients and servers without any changes in the program's code
DMVPN (planned)	Method of building scalable IPsec VPNs
SSTP (planned)	SSTP client instance support
ZeroTier	ZeroTier VPN client support
WireGuard	WireGuard VPN client and server support

MODBUS TCP SLAVE (PLANNED)

ID filtering	Respond to one ID in range [1;255] or any
Allow remote access	Allow access through WAN
Custom registers	Modbus TCP custom register block, which allows to read/write to a file inside the router, and can be used to extend Modbus TCP slave functionality

MODBUS TCP MASTER (PLANNED)

Supported functions	01, 02, 03, 04, 05, 06, 15, 16
Supported data formats	8 bit: INT, UINT; 16 bit: INT, UINT (MSB or LSB first); 32 bit: float, INT, UINT (ABCD (big-endian), DCBA (little-endian), CDAB, BADC), HEX, ASCII

MQTT GATEWAY (PLANNED)

Gateway	Allows sending commands and receiving data from Modbus Master trough MQTT broker

DATA TO SERVER (PLANNED)

Protocols	HTTP(S), MQTT, Azure MQTT, Kinesis

MONITORING & MANAGEMENT

WEB UI	HTTP/HTTPS, status, configuration, FW update, CLI, troubleshoot, event log, system log, kernel log
FOTA	Firmware update from server, automatic notification
SSH	SSH (v1, v2)
SMS	SMS status, SMS configuration, send/read SMS via HTTP POST/GET
CALL	Reboot, Status, Mobile data on/off, Output on/off
MQTT (planned)	MQTT Broker, MQTT publisher
SNMP (planned)	SNMP (v1, v2, v3), SNMP trap
JSON-RPC	Management API over HTTP/HTTPS
Modbus (planned)	Modbus TCP status/control
RMS	Teltonika Remote Management System (RMS)

IoT PLATFORMS

Clouds of things	Allows monitoring of: Device data, Mobile data, Network info, Availability
ThingWorx	Allows monitoring of: WAN Type, WAN IP, Mobile Operator Name, Mobile Signal Strength, Mobile Network Type
Cumulocity	Allows monitoring of: Device Model, Revision and Serial Number, Mobile Cell ID, ICCID, IMEI, Connection Type, Operator, Signal Strength, WAN Type and IP
Azure IoT Hub	Can send device IP, Number of bytes send/received, Mobile connection state, Network link state, IMEI, ICCID, Model, Manufacturer, Serial, Revision, IMSI, SIM State, PIN state, GSM signal, WCDMA RSCP, WCDMA EC/IO, LTE RSRP, LTE SINR, LTE RSRQ, CELL ID, Operator, Operator number, Connection type, Temperature, PIN count to Azure IoT Hub server

Copyright © 2021, TELTONIKA NETWORKS. Specifications and information given in this document are subject to change by TELTONIKA NETWORKS without prior notice.

SYSTEM CHARACTERISTICS

CPU	QCA9531, MIPS 24kc, 650 MHz
RAM	128 MB, DDR2
FLASH storage	16 MB, SPI Flash

FIRMWARE / CONFIGURATION

WEB UI	Update FW from file, check FW on server, configuration profiles, configuration backup
FOTA	Update FW/configuration from server
RMS	Update FW/configuration for multiple devices at once
Keep settings	Update FW without losing current configuration

INPUT/OUTPUT

Configurable I/O	2 x Configurable digital Inputs/Outputs. Digital input 0 - 6 V detected as logic low, 8 - 30 V detected as logic high. Open collector output, max output 30 V, 300 mA
Events	SMS, Email, RMS

POWER

Connector	4 pin industrial DC power socket
Input voltage range	9 - 30 VDC, reverse polarity protection, voltage surge/transient protection
Power consumption	10.5 W max

PHYSICAL INTERFACES (PORTS, LEDS, ANTENNAS, BUTTONS, SIM)

Ethernet	2 x RJ45 ports, 10/100 Mbps
I/Os	2 x Configurable digital Inputs/Outputs on 4 pin power connector
Status LEDs	2 x Mobile connection type, 3 x Mobile connection strength, 2 x Eth status, 1 x Power
SIM	1 x SIM slots (Mini SIM - 2FF), 1.8 V/3 V, external SIM holders
Antenna	2 x SMA for LTE, 2 x RP-SMA for WiFi
Power	1 x 4 pin DC connector
Reset	Reboot/User default reset/Factory reset button

PHYSICAL SPECIFICATION

Casing material	Aluminium housing with DIN rail mounting option
Dimensions (W x H x D)	100 x 30 x 85 mm
Weight	247 g
Mounting options	DIN rail, flat surface placement

OPERATING ENVIRONMENT

Operating temperature	-40 C to 75 C
Operating humidity	10 % to 90 % non-condensing

Copyright © 2021, TELTONIKA NETWORKS. Specifications and information given in this document are subject to change by TELTONIKA NETWORKS without prior notice.

HARDWARE INSTALLATION

1. Push the SIM button with the SIM needle.
2. Pull out the SIM holder.
3. Insert your SIM card into the SIM holder.
4. Slide the SIM holder back into the router.
5. Attach Mobile and WiFi antennas.
6. Connect the power adapter to the socket on the front of the device. Then plug the other end of the power adapter into a power outlet.
7. Connect to the device wirelessly using SSID and password provided on the device information label or use an Ethernet cable connected to LAN port.

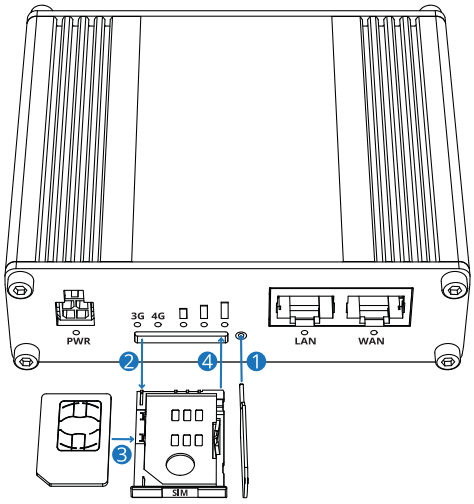

LOGIN TO DEVICE

1. To enter the router's Web interface (WebUI), type http://192.168.1.1 into the URL field of your Internet browser.
2. Use login information shown in image A when prompted for authentication.
3. After you log in, you will be prompted to change your password for security reasons. The new password must contain at least 8 characters, including at least one uppercase letter, one lowercase letter, and one digit. This step is mandatory, and **you will not be able to interact with the router's WebUI before you change the password.**
4. When you change the router's password, the Configuration Wizard will start. The Configuration Wizard is a tool used to set up some of the router's main operating parameters.
5. Go to the Overview page and pay attention to the Signal Strength indication (image B). To maximize the cellular performance try adjusting the antennas or changing the location of your device to achieve the best signal conditions.

A.

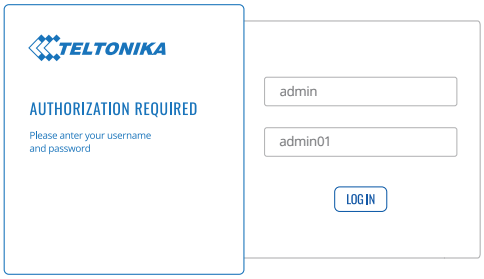

B.



TECHNICAL INFORMATION

Radio specifications	
RF technologies	3G, 4G, WiFi
Max RF power	24 dBm@WCDMA, 23 dBm@LTE, 20 dBm@WiFi
Bundled accessories specifications*	
Power adapter	Input: 0.6 A@100-240 VAC, Output: 12 VDC, 1.5 A, 4 pin plug
Mobile antenna	698~960/1710~2690 MHz, 50 Ω, VSWR<3, gain** 4 dBi, omnidirectional, SMA male connector
WiFi antenna	2400~2483.5 MHz, 50 Ω, VSWR<2, gain** 5 dBi, omnidirectional, RP-SMA male connector

*Order code dependent.
**Higher gain antenna can be connected to compensate for cable attenuation when a cable is used. The user is responsible for the compliance with the legal regulations.

Copyright © 2021, TELTONIKA NETWORKS. Specifications and information given in this document are subject to change by TELTONIKA NETWORKS without prior notice.

WHAT'S IN THE BOX?

STANDARD PACKAGE CONTAINS

- RUT360
- 18 W Euro PSU
- 2 x LTE antennas (swivel, SMA male)
- 2 x WiFi antenna (swivel, RP-SMA male)
- Ethernet cable (1.5 m)
- QSG (Quick Start Guide)
- RMS Flyer
- Packaging box





RUT360



2 X LTE ANTENNAS (SWIVEL, SMA MALE)



2 X WIFI ANTENNA (SWIVEL, RP-SMA MALE)



18 W EURO PSU



ETHERNET CABLE (1.5 M)

Copyright © 2021, TELTONIKA NETWORKS. Specifications and information given in this document are subject to change by TELTONIKA NETWORKS without prior notice.

STANDARD ORDER CODES

PRODUCT CODE	HS CODE	HTS CODE	PACKAGE CONTAINS
RUT360******	851762	8517.62.00	Standard package

For more information on all available packaging options – please contact us directly.

STANDARD ORDER CODES

PRODUCT CODE	REGION (OPERATOR)	FREQUENCY
RUT360 0*****	Europe, the Middle East, Africa, Australia, APAC[2], Brasil, Malaysia	• 4G (LTE-FDD): B1, B3, B5, B7, B8, B20, B28, B32[1] • 4G (LTE-TDD): B38, B40, B41 • 3G: B1, B3, B5, B8
RUT360 1*****	North America	• 4G (LTE-FDD): B2, B4, B5, B7, B12, B13, B25, B26, B29[1], B30, B66 • 3G: B2, B4, B5

The price and lead-times for region (operator) specific versions may vary. For more information please contact us.

1 - LTE-FDD B29 and B32 support receiving only, and are only for secondary component carrier in 2×CA

2 - Excluding Japan and CMCC

Copyright © 2021, TELTONIKA NETWORKS. Specifications and information given in this document are subject to change by TELTONIKA NETWORKS without prior notice.

MOUNTING OPTIONS

DIN RAIL KIT

Parameter	Value
Mounting standard	35mm DIN Rail
Material	Low carbon steel
Weight	57g
Screws included	Philips Pan Head screw #6-32×3/16, 2pcs
Dimensions	82 mm x 46 mm x 20 mm
RoHS Compliant	V

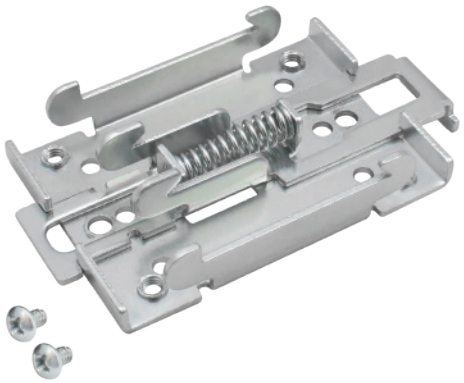

DIN RAIL KIT

- DIN Rail adapter
- Philips Pan Head screw #6-32×3/16, 2pcs for RUT2xx/RUT9xx

ORDER CODE	PRODUCT CODE	HS CODE	HTS CODE
088-00267	PR5MEC00	73269098	7326.90.98

For more information on all available packaging options – please contact us directly.

COMPACT DIN RAIL KIT

Parameter	Value
Mounting standard	35mm DIN Rail
Material	ABS + PC plastic
Weight	6.5 g
Screws included	Philips Pan Head screw #6-32×3/16, 2pcs
Dimensions	70 mm x 25 mm x 14,5 mm
RoHS Compliant	V



DIN RAIL KIT

- Compact plastic DIN Rail adapter (70x25x14,5mm)
- Philips Pan Head screw #6-32×3/16, 2pcs

ORDER CODE	PRODUCT CODE	HS CODE	HTS CODE
088-00270	PR5MEC11	73269098	7326.90.98

For more information on all available packaging options – please contact us directly.

SURFACE MOUNTING KIT

Parameter	Value
Mounting standard	Flat surface mount
Material	ABS + PC plastic
Weight	2x5 g
Screws included	Philips Pan Head screw #6-32×3/16, 2pcs
Dimensions	25 mm x 48 mm x 7.5 mm
RoHS Compliant	V



DIN RAIL KIT

- Surface mounting kit
- Philips Pan Head screw #6-32×3/16, 2pcs

ORDER CODE	PRODUCT CODE	HS CODE	HTS CODE
088-00281	PR5MEC12	73269098	7326.90.98

For more information on all available packaging options – please contact us directly.

Copyright © 2021, TELTONIKA NETWORKS. Specifications and information given in this document are subject to change by TELTONIKA NETWORKS without prior notice.

RUT360 SPATIAL MEASUREMENTS & WEIGHT

MAIN MEASUREMENTS

W x H x D dimensions for RUT360:

Device housing*:	100 x 30 x 85
Box:	173 x 71 x 148

*Housing measurements are presented without antenna connectors and screws; for measurements of other device elements look to the sections below.

TOP VIEW

The figure below depicts the measurements of RUT360 and its components as seen from the top:

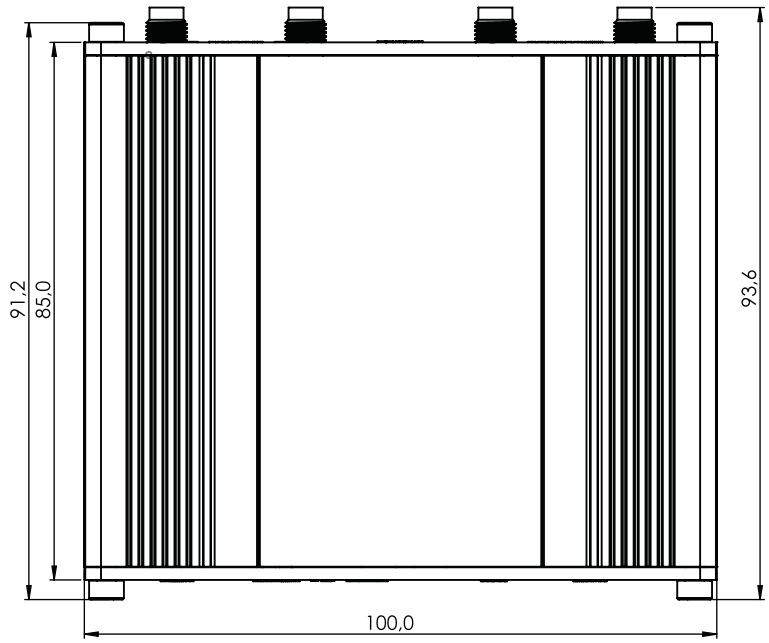

RIGHT VIEW

The figure below depicts the measurements of RUT360 and its components as seen from the right side:

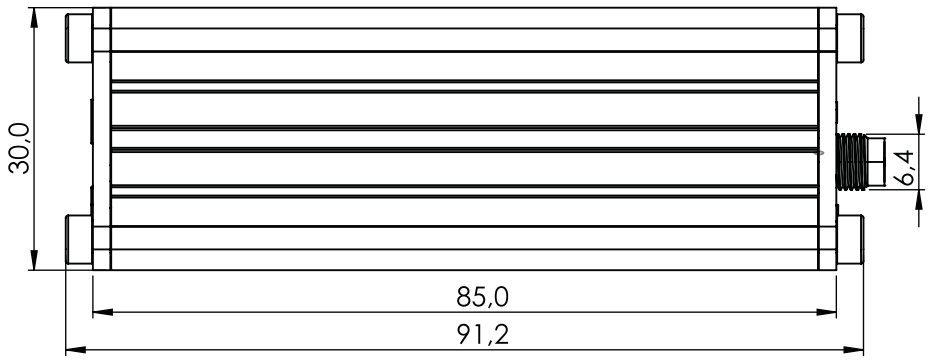

Copyright © 2021, TELTONIKA NETWORKS. Specifications and information given in this document are subject to change by TELTONIKA NETWORKS without prior notice.

FRONT VIEW

The figure below depicts the measurements of RUT360 and its components as seen from the front panel side:

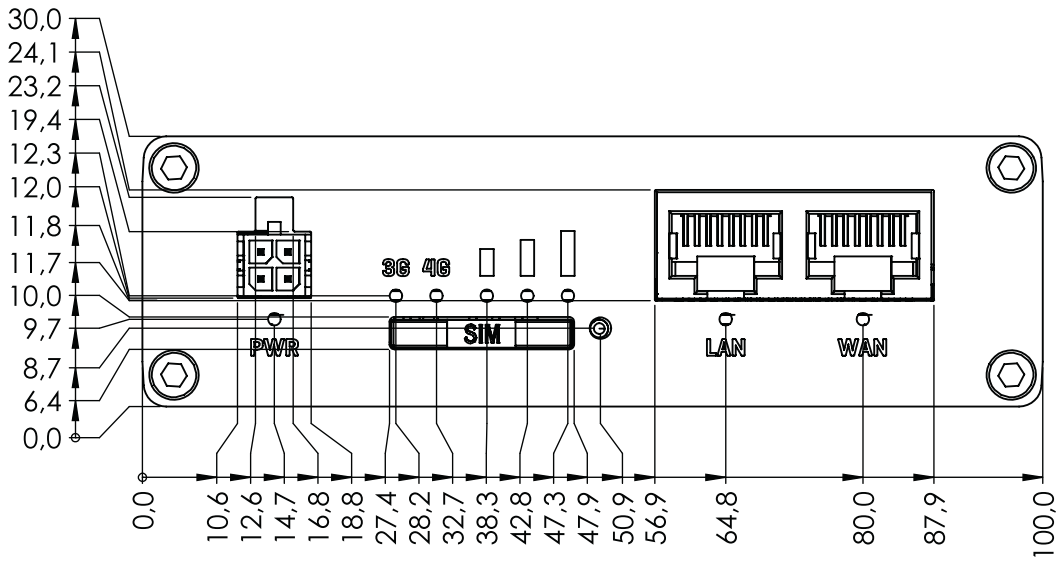

REAR VIEW

The figure below depicts the measurements of RUT360 and its components as seen from the back panel side:

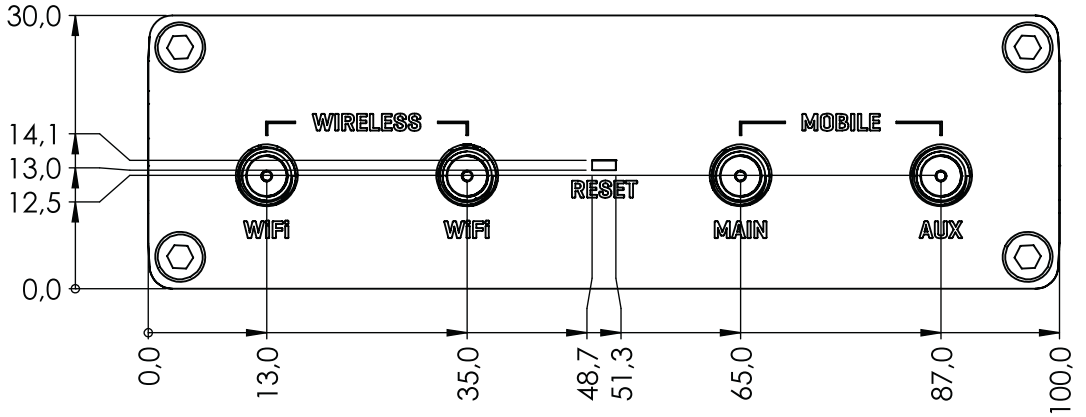

Copyright © 2021, TELTONIKA NETWORKS. Specifications and information given in this document are subject to change by TELTONIKA NETWORKS without prior notice.

MOUNTING SPACE REQUIREMENTS

The figure below depicts an approximation of the device's dimensions when cables and antennas are attached:

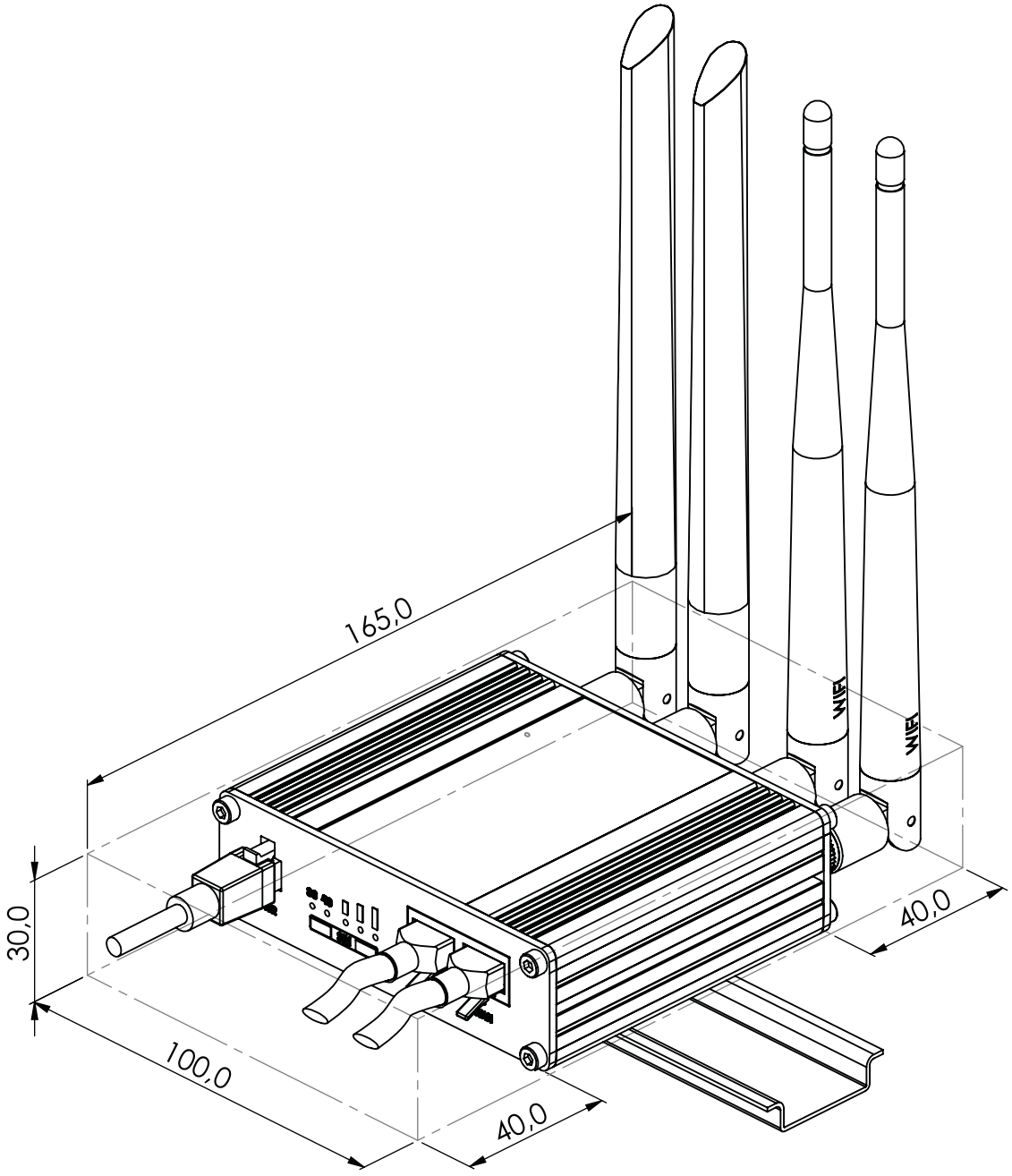

Copyright © 2021, TELTONIKA NETWORKS. Specifications and information given in this document are subject to change by TELTONIKA NETWORKS without prior notice.

DIN RAIL

The scheme below depicts protrusion measurements of an attached DIN Rail:

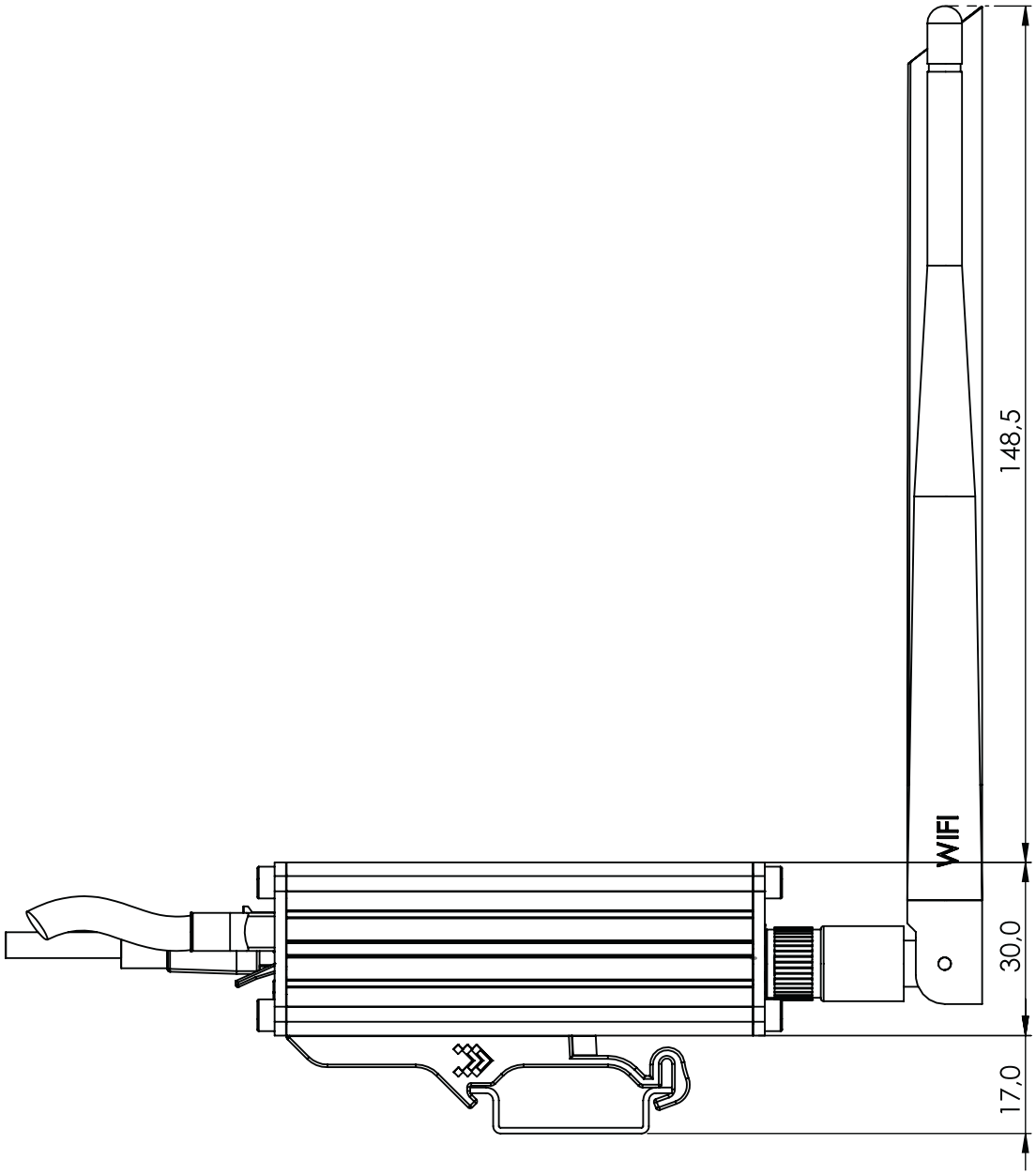

Copyright © 2021, TELTONIKA NETWORKS. Specifications and information given in this document are subject to change by TELTONIKA NETWORKS without prior notice.