SIEMENS

Data sheet 3RV2011-1GA10

Siemens EcoTech



Circuit breaker size S00 for motor protection, CLASS 10 A-release 4.5...6.3 A N-release 82 A screw terminal Standard switching capacity

product brand name	SIRIUS
product designation	Circuit breaker
design of the product	For motor protection
product type designation	3RV2
General technical data	
Product equipment of circuit breaker for motor protection complete unit with protection device	Yes
size of the circuit-breaker	S00
size of contactor can be combined company-specific	S00, S0
product function disconnector functionality	Yes
product extension auxiliary switch	Yes
power loss [W] for rated value of the current	
● at AC in hot operating state	7.25 W
● at AC in hot operating state per pole	2.4 W
type of calculation of power loss current-dependent	quadratic
insulation voltage with degree of pollution 3 at AC rated value	690 V
surge voltage resistance rated value	6 kV
maximum permissible voltage for protective separation	
● in networks with ungrounded star point between main and auxiliary circuit	400 V
● in networks with grounded star point between main and auxiliary circuit	400 V
protection class IP	
● on the front according to IEC 60529	IP20
● on the front	IP20
● of the terminal	IP20
shock resistance according to IEC 60068-2-27	25g / 11 ms
mechanical service life (operating cycles)	
● of the main contacts typical	100 000
● of auxiliary contacts typical	100 000
electrical endurance (operating cycles) typical	100 000
reference code according to IEC 81346-2	Q
continuous current rated value	6.3 A
Substance Prohibitance (day/month/year)	10/01/2009
Net Weight	328.6 g
Ambient conditions	
installation altitude at height above sea level maximum	2 000 m

Subject to change without notice
© Copyright Siemens

ambient temperature	
● during operation	-20 ... +60 °C
● during storage	-50 ... +80 °C
● during transport	-50 ... +80 °C
temperature compensation	-20 ... +60 °C
relative humidity during operation	10 ... 95 %
Main circuit	
number of poles for main current circuit	3
adjustable current response value current of the current-dependent overload release	4.5 ... 6.3 A
type of voltage for main current circuit	AC
operating voltage	
● rated value	690 V
● rated value	20 ... 690 V
● at AC-3 rated value maximum	690 V
● at AC-3e rated value maximum	690 V
operating frequency rated value	50 ... 60 Hz
operational current rated value	6.3 A
operational current	
● at AC-3 at 400 V rated value	6.3 A
● at AC-3e at 400 V rated value	6.3 A
operating power	
● at AC-3	
— at 230 V rated value	1.5 kW
— at 400 V rated value	2.2 kW
— at 500 V rated value	3 kW
— at 690 V rated value	4 kW
● at AC-3e	
— at 230 V rated value	1.5 kW
— at 400 V rated value	2.2 kW
— at 500 V rated value	3 kW
— at 690 V rated value	4 kW
operating frequency	
● at AC-3 maximum	15 1/h
● at AC-3e maximum	15 1/h
Auxiliary circuit	
type of voltage for auxiliary and control circuit	AC/DC
number of NC contacts for auxiliary contacts	0
number of NO contacts for auxiliary contacts	0
number of CO contacts for auxiliary contacts	0
Protective and monitoring functions	
product function	
● ground fault detection	No
● phase failure detection	Yes
trip class	CLASS 10
design of the overload release	thermal
protection function thermal overload protection (ANSI 49)	Yes
maximum short-circuit current breaking capacity (Icu)	
● at AC at 240 V rated value	100 kA
● at AC at 400 V rated value	100 kA
● at AC at 500 V rated value	100 kA
● at AC at 690 V rated value	6 kA
operating short-circuit current breaking capacity (Ics) at AC	
● at 240 V rated value	100 kA
● at 400 V rated value	100 kA
● at 500 V rated value	100 kA
● at 690 V rated value	4 kA
response value current of instantaneous short-circuit trip unit	82 A
UL/CSA ratings	

© Copyright Siemens

full-load current (FLA) for 3-phase AC motor	
● at 480 V rated value	6.3 A
● at 600 V rated value	6.3 A
yielded mechanical performance [hp]	
● for single-phase AC motor	
— at 110/120 V rated value	0.25 hp
— at 230 V rated value	0.5 hp
● for 3-phase AC motor	
— at 200/208 V rated value	1 hp
— at 220/230 V rated value	1.5 hp
— at 460/480 V rated value	3 hp
— at 575/600 V rated value	5 hp
UL File Number (CCN)	E47705 (NLRV, NLRV7), E156943 (NKJH, NKJH7)
Short-circuit protection	
product function short circuit protection	Yes
design of the short-circuit trip	magnetic
design of the fuse link for IT network for short-circuit protection of the main circuit	
● at 400 V	gL/gG 50 A
● at 500 V	gL/gG 40 A
● at 690 V	gL/gG 35 A
certificate of suitability according to ATEX directive 2014/34/EU	DMT 02 ATEX F 001
type of protection according to ATEX directive 2014/34/EU	Ex II (2) GD
Installation/ mounting/ dimensions	
mounting position	any
fastening method	screw and snap-on mounting onto 35 mm DIN rail according to DIN EN 60715
Mounting method of circuit breaker for Transformer protection, Generator protection and system protection optional standard bar mounting	Yes
height	97 mm
width	45 mm
depth	97 mm
required spacing	
● with side-by-side mounting	
— forwards	0 mm
— backwards	0 mm
— upwards	50 mm
— downwards	50 mm
— at the side	0 mm
● for grounded parts	
— forwards	0 mm
— backwards	0 mm
— upwards	50 mm
— at the side	30 mm
— downwards	50 mm
● for live parts	
— forwards	0 mm
— backwards	0 mm
— upwards	50 mm
— downwards	50 mm
— at the side	30 mm
● for grounded parts at 400 V	
— downwards	30 mm
— upwards	30 mm
— at the side	9 mm
● for live parts at 400 V	
— downwards	30 mm
— upwards	30 mm
— at the side	9 mm
● for grounded parts at 500 V	

Subject to change without notice
© Copyright Siemens

— downwards	30 mm
— upwards	30 mm
— at the side	9 mm
● for live parts at 500 V	
— downwards	30 mm
— upwards	30 mm
— at the side	9 mm
● for grounded parts at 690 V	
— downwards	50 mm
— upwards	50 mm
— backwards	0 mm
— at the side	30 mm
— forwards	0 mm
● for live parts at 690 V	
— downwards	50 mm
— upwards	50 mm
— backwards	0 mm
— at the side	30 mm
— forwards	0 mm
Connections/ Terminals	
product component removable terminal for auxiliary and control circuit	No
type of electrical connection	
● for main current circuit	screw-type terminals
arrangement of electrical connectors for main current circuit	Top and bottom
type of connectable conductor cross-sections	
● for main contacts	
— solid or stranded	2x (0,75 ... 2,5 mm²), 2x 4 mm²
— finely stranded with core end processing	2x (0.5 ... 1.5 mm²), 2x (0.75 ... 2.5 mm²)
● for AWG cables for main contacts	2x (18 ... 14), 2x 12
connectable conductor cross-section for main contacts	
● solid or stranded	0.75 ... 4 mm²
● finely stranded with core end processing	0.5 ... 2.5 mm²
AWG number as coded connectable conductor cross section for main contacts	18 ... 12
tightening torque	
● for main contacts with screw-type terminals	0.8 ... 1.2 N·m
design of screwdriver shaft	Diameter 5 to 6 mm
size of the screwdriver tip	Pozidriv size 2
design of the thread of the connection screw	
● for main contacts	M3
Safety related data	
product function suitable for safety function	Yes
suitability for use	
● safety-related switching on	No
● safety-related switching OFF	Yes
service life maximum	10 a
test wear-related service life necessary	Yes
proportion of dangerous failures	
● with low demand rate according to SN 31920	40 %
● with high demand rate according to SN 31920	50 %
B10 value with high demand rate according to SN 31920	5 000
failure rate [FIT] with low demand rate according to SN 31920	50 FIT
ISO 13849	
device type according to ISO 13849-1	3
overdimensioning according to ISO 13849-2 necessary	Yes
IEC 61508	
safety device type according to IEC 61508-2	Type A

© Copyright Siemens

T1 value	
• for proof test interval or service life according to IEC 61508	10 a
Electrical Safety	
protection class IP on the front according to IEC 60529	IP20
touch protection on the front according to IEC 60529	finger-safe, for vertical contact from the front
Display	
display version for switching status	Handle
Approvals Certificates	
Environmental Product Declaration	
• global warming potential [CO2 eq] / during manufacturing	1.98 kg
• global warming potential [CO2 eq] / during sales	0.134 kg
• global warming potential [CO2 eq] / during operation	72.7 kg
• global warming potential [CO2 eq] / after end of life	-0.116 kg
• global warming potential [CO2 eq] / total	74.698 kg

Environment

Environmental Confirmations

General Product Approval

General Product Approval

For use in hazardous locations

IECEx

For use in hazardous locations

ATEX

Test Certificates

Special Test Certificate

Type Test Certificates/Test Report

Maritime application

ABS

Maritime application

DNV

LRS

PRS

RINA

other

Miscellaneous

Confirmation

other

Miscellaneous

Railway

Confirmation

Special Test Certificate

Further information

Information on the packaging
https://support.industry.siemens.com/cs/ww/en/view/109813875
Information for data generation and storage
https://support.industry.siemens.com/cs/ww/en/view/109995012
Information- and Downloadcenter (Catalogs, Brochures,…)
https://www.siemens.com/ic10
Industry Mall (Online ordering system)
https://mall.industry.siemens.com/mall/en/en/Catalog/product?mlfb=3RV2011-1GA10
Service&Support (Manuals, Certificates, Characteristics, FAQs,...)
https://support.industry.siemens.com/cs/ww/en/ps/3RV2011-1GA10

Subject to change without notice
© Copyright Siemens

Image database (product images, 2D dimension drawings, 3D models, device circuit diagrams, EPLAN macros, ...)
https://www.automation.siemens.com/bilddb/cax_de.aspx?mlfb=3RV2011-1GA10&lang=en
Cax online generator
https://support.automation.siemens.com/WW/CAXorder/default.aspx?lang=en&mlfb=3RV2011-1GA10
Kennlinien
https://curves.simaris.siemens.com/curves/3RV2011-1GA10

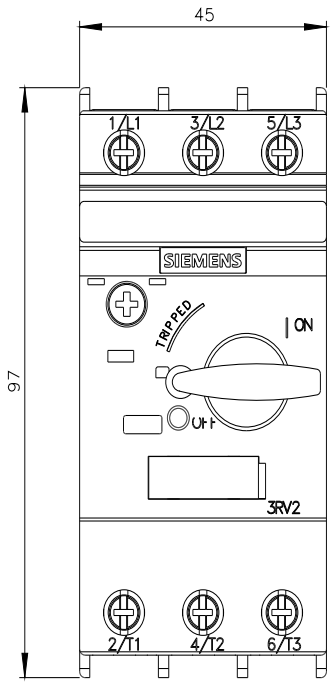

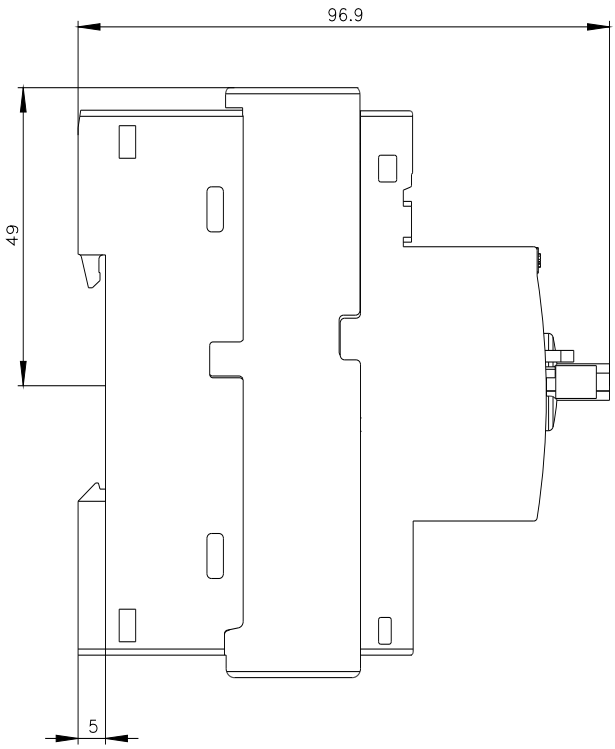

© Copyright Siemens

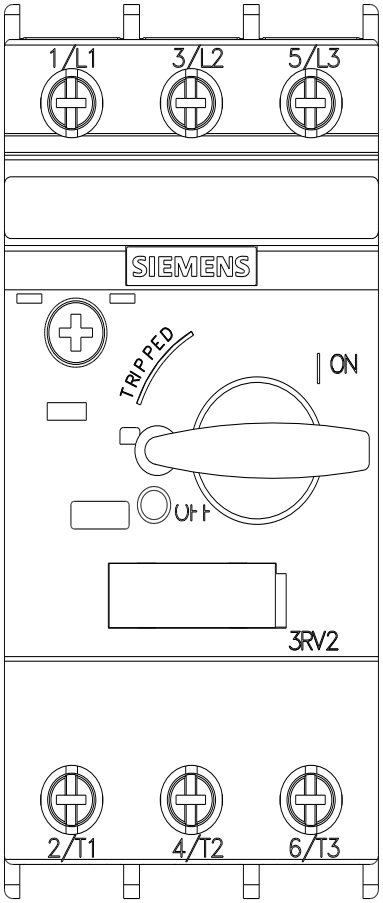

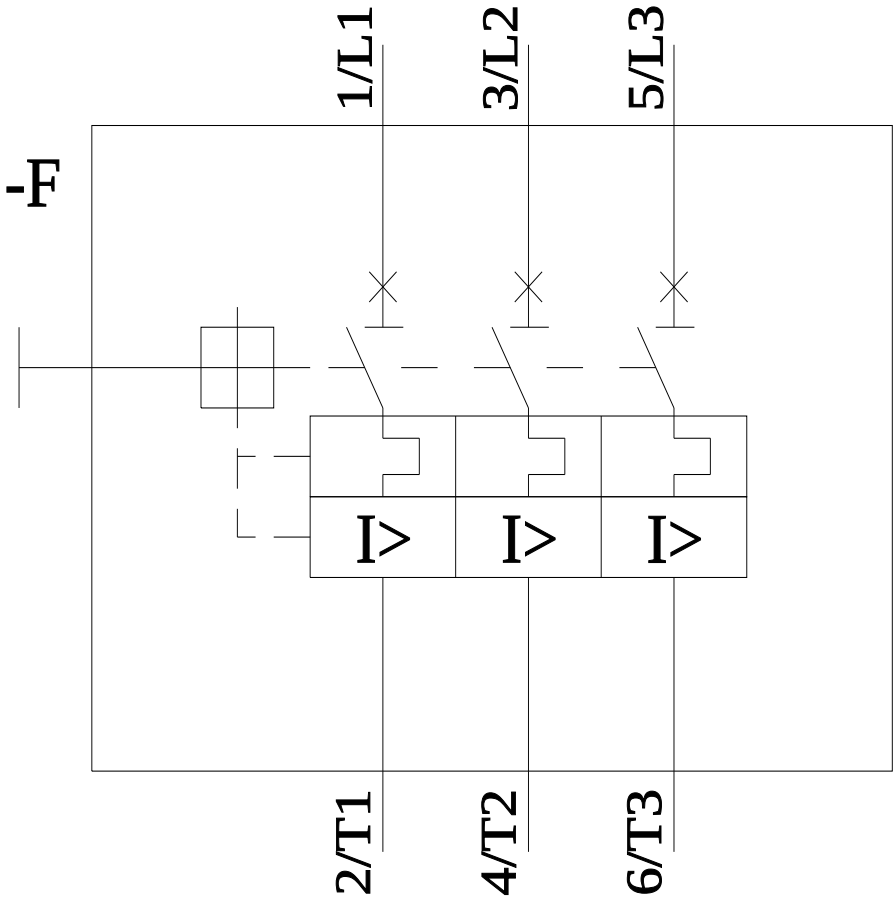

last modified: 5/5/2026

Subject to change without notice
© Copyright Siemens